ABSTRACT

GREENWOOD, JERUSHA BLOYER. Sustainable Development in a Tourism Destination Context: A Plimsoll Model of Sustainability in Tyrrell County, North Carolina. (Under the direction of Larry Gustke and Gene Brothers.)

The purpose of the research was to develop and test a conceptual framework for sustainable tourism development to address (a) the apparent lack of a theoretical framework for sustainable development; (b) the integration of social, economic, and ecological elements of sustainable development; and (c) the contextual nature of sustainable development. General Systems Theory was used as a theoretical framework to adapt the Plimsoll Line to model the driving force, state, and response indicators of sustainability in Tyrrell County, North Carolina. Tyrrell County is in the preliminary stages of tourism product development, has multiple cultural and natural resource attractions available to develop, and has framed their philosophy about development around sustainability principles. Data collection was guided by the catalog of baseline issues and indicators developed by the World Tourism Organization. Indicators such as employment in the tourism industry, expenditures attributed to the tourism industry, air and water quality, community services, and housing issues were used in the study. Two datasets were used for the analysis: a 24-year dataset based on the available Tyrrell County data, and a 250-year dataset of imputed values based on the 24-year dataset. The 250-year dataset was used to test model stability and most conclusions were drawn from the 24-year dataset. Structural equation modeling using the AMOS software platform was used to generate and analyze the hypothesized relationships. The analysis process yielded three iterations. The first, a unidimensionality analysis, reduced the number of items useful to model relationships from 24 to 18. The second iteration resulted in a

removal of state indicators from the overall model to improve model fit. The final iteration of the model improved model fit by connecting covariant relationships in error variance predicted by AMOS Significant relationships were found between the driving force and response indicators for the 24-year dataset, indicating a tourism destination in its infancy. The Plimsoll Model of Tyrrell County indicates that, currently, the state indicators of the destination do not provide enough information about "cargo" of the destination to be considered important when reviewing the overall model. This can be interpreted in one of two ways. Mathematically, those particular indicators are not important to the function of the model, i.e., the cargo are not important to the overall function and successful voyage of the ship. Conversely, one could conclude that the very fact those items were not important in the model could be interpreted as an indicator that these components of the model need specific attention, more so than any other variables. Specifically, issues regarding air and water quality and the ratio of average tourism industry income to total income should be addressed. Regarding the driving force and response indicators, interpretation of the results suggest a lack of employment opportunities in the tourism industry accompanied by a non-increasing net migration. Development of the tourism product may stem the tide of out-migration from Tyrrell County through the provision of employment opportunities.

The next step in model testing is to collect similar data for a county with a more developed tourism product in a similar geographical area and compare results of an analysis of that county to those of Tyrrell County. As more and better data become available, the model can be modified and verified to provide a better "picture" of the

current state of development and tourism in Tyrrell County and potentially make recommendations regarding planning decisions (in the form of response variables).

Broader implications for sustainability research suggest the importance of theoretical foundations in the form of General Systems Theory is crucial to any attempt to model an entity as complex as the systems of interaction between social components (e.g., migration patterns of residents and workers, provision of social services to residents, and employment patterns), environmental components (e.g., air and water quality, use intensity, and community expenditures on environmental protection), and economic components (e.g. revenues from tourism, payroll for travel industry employees, costs of community services) at a tourism destination. Models developed without a theoretical basis that underlies the interconnectedness of elements of a tourism destination, and the use of such a tool for policy-making could potentially lead to poor planning and the negative impacts attributed to tourism. What drives development, and therefore sustainable development, in a tourism destination is integrally related to the responses the community has through policy or otherwise to those forces. More research is needed into the complex relationships underlying the elements of a community in order to understand more completely the manifest relationships.

SUSTAINABLE DEVELOPMENT IN A TOURISM DESTINATION CONTEXT: A PLIMSOLL MODEL OF SUSTAINABILITY IN TYRRELL COUNTY, NORTH CAROLINA

By
JERUSHA BLOYER GREENWOOD

A dissertation submitted to the Graduate Faculty of
North Carolina State University
In partial fulfillment of the requirements for
the degree of Doctor of Philosophy

PARKS, RECREATION, AND TOURISM MANAGEMENT

Raleigh, NC

2006

APPROVED BY:

Karla Henderson, Ph.D.

Yu-Fai Leung, Ph.D.

Larry Nielsen, Ph.D.

Larry Gustke, Ph.D.
Advisory Committee Co-Chair

Gene Brothers, Ph.D.
Advisory Committee Co-Chair

This work is for my family:

the Bloyers, the Christensens, the Greenwoods and the Moores

BIOGRAPHY

Jerusha Bloyer Greenwood was born January 3, 1978 in Salt Lake City, Utah. She is the daughter of Janeen Christensen Bloyer and Donald R. Bloyer, Jr. She has two older brothers, Donald R. Bloyer, III and Christen Timothy Bloyer. She is married to Paul Brian Greenwood of Washington, North Carolina.

Greenwood attended Skyline High School in Salt Lake City, Utah and graduated in 1996. She attended the University of Utah from 1996 to 1998 and obtained a Bachelor of Science in Environmental Studies. Following graduation in December 1998, Greenwood traveled to England, France, Switzerland and Italy before returning to Utah to begin her graduate degree in August 1999. In 2002, Greenwood graduated from the University of Utah with a Masters of Science degree in Parks, Recreation and Tourism with a specialization in tourism development. During this time, Greenwood served as a Parks Planner II for the Utah Division of Parks and Recreation, and then as the Academic Program Support Specialist for the Parks, Recreation and Tourism Department at the University of Utah. After graduating in 2002, Greenwood immediately pursued her doctorate degree in sustainability and tourism development in the Department of Parks, Recreation and Tourism Management at North Carolina State University in Raleigh.

ACKNOWLEDGEMENTS

First and foremost, this dissertation is dedicated to my entire doctoral committee for their guidance and support. In particular, I would like to thank Dr. Larry Gustke and Dr. Gene Brothers for serving as co-Committee chairs and for providing a sounding board for my off-the-wall ideas.

Very special thanks must be extended to Dr. Beth Wilson. She welcomed me with open arms to North Carolina and was one of the first reasons I knew I belonged in Raleigh. She has been the emotional support that all graduate students in the PRTM department find themselves turning to from time to time and is more than ready to do anything she can do to help us succeed. Dr. Beth also served as the celebrant for my wedding to Brian Greenwood, and we will hold a special place in our hearts for her forever.

The Forestry Foundation and the Hoffman Forest Fellowship provided by the College of Natural Resources was my financial support for three of my four years at North Carolina State University. The opportunities provided to graduate students through the provision of this support is priceless. I sincerely hope it is available indefinitely for graduate students.

The list of individuals I would like to recognize for their support is extensive – they span my graduate career both at North Carolina State and the University of Utah. I wish to thank Dr. Phil Rea, Dr. Gary D. Ellis, the entire Recreation Resources Service staff, the entire PRTM support staff, my mom, dad, mothers and fathers-in-law, my brothers and their families, and to my wonderful husband who supported me from the first draft through the final edit.

TABLE OF CONTENTS

LIST OF TABLES

LIST OF TABLES (continued)

LIST OF TABLES (Contined)

LIST OF FIGURES

CHAPTER 1

INTRODUCTION

Sustainable development has received intense attention in both academic research and mass media in the last 20 years as a desired yet elusive goal. Sustainable tourism development has also been equally enigmatic. These concepts grew out of dissatisfaction with entrenched policies of continuous economic growth and its unequal distribution of benefits and costs, both environmental and social (Bramwell, & Lane, 1993; Hardy, Beeton, and Pearson, 2002). Similarly, sustainable tourism development is found to be difficult to define (Swarbrooke, 1999). For Butler (1999), the term could be easily defined as a form of tourism sustained over a period of time. Sustainable tourism development, according to Swarbrooke, could be defined similarly to the WCED definition of sustainability: tourism that meets the needs of today's tourists and host without taking away from future generations the resources necessary to fulfill their own needs. Thus, the same controversy exists over a definition for sustainable *tourism* development.

A common criticism of both sustainable development and sustainable tourism development is that there is no consistently agreed upon theoretical framework from which a scientific understanding can be built (Cocklin, 1995). Without guidance from theory that is verified and re-verified through testing, the theoretical framework or model can be used inappropriately and lead to poor planning. A tourism destination without an adequate plan for development that addresses the economic as well as social and environmental functions of the industry is ill-prepared for the impacts of visitors, catastrophic events, and shifting market forces.

Without an understanding of these potential impacts on the social-environmental-economic fabric of a community, the sustainability of that community is questionable. Therefore, a need exists to understand the complex interplay between the economic, environmental and social dynamics of a community. Sustainable development crosses economic, social, and environmental borders, requiring environmental stewardship, inter- and intra generational equity, and creating economic opportunity for less developed countries (WCED, 1987). Brundtland (1987) warned that a persistent ignorance of the inseparability of these elements would constitute a grave mistake by the global community, and human needs must be understood. Many approaches, however, tend to focus on only one aspect of a systems overall sustainability, for example either environmental or economic sustainability (Cooper & Vargas, 2004). Mathieson and Wall (1982) recognized the scope of tourism impacts to exist in the economic, physical (environmental) and social arenas. In some cases, the ties between environment and economy have been made, but according to Cocklin (1995) the efforts have been superficial and omit reference to the social dimensions of sustainability. Twining-Ward (1999) interpreted this apparent lack of attention to the social aspects of sustainable tourism development as an impediment to moving sustainability from principles to policy-making.

Efforts to create universal principles of sustainability have also come under criticism as an understanding has grown that threats to sustainability are often site-specific and have discrete social and ecological attributes (National Research Council, 1999). Sustainable systems, according to Meyer and Helfman (1993) are not generalizable at the global scale, but are instead adaptable to local situations. This dissertation addresses the contextual nature of sustainability for tourism. This is done by using a Delphi-method developed set of

sustainability indicators by the World Tourism Organization to examine various baseline issues of sustainability at a destination. Tyrrell County, North Carolina was examined using these indicators because it is a relatively small county in a state dependent on tourism. The county has a number of attractive destinations within its borders, and in terms of tourism product development, is in its infancy.

General Systems Theory guides the formation of a conceptual framework that is fashioned from two concepts. Past research on tourism development has focused primarily on a reductionist perspective of economic or environmental or social impacts. Although this approach has resulted in a wealth of knowledge about each, any interconnectedness between them is only assumed. Looking at tourism development from a systems perspective is more complex, but the interrelationships are too important to merely assume. Shocks in one aspect in the system ultimately have impacts in others.

To represent the tourism system, two concepts were applied. The Plimsoll Line, a tool used in shipping to determine the optimal loading of ships was incorporated as a way to visualize the interactions between the next concept, the Driving Force-State-Response framework (DSR). The Plimsoll Line is a demarcation on the hull of a ship that acts as an optimal loading indicator. Introduced to the sustainability debate by economist Herman Daly, the Plimsoll Line is a way to visualize how we can "sink" or "sail" depending on how we load the cargo of our resource-laden boats. The DSR was developed by the Organization for Economic Cooperation and Development (1997) in order to monitor the environmental, social and economic impacts of economic development. The driving force variable serves as the engine and fuel, driving the boat and fueling its development, the state indicators serve as the cargo of the boat, and the response indicators serve as the pilot who responds to the

shifting environment around the boat, to the function of the engine and amount of fuel, and to the condition of the cargo in the hold. Structural equation modeling, as a statistical tool that analyzes relationships between latent, or unmeasurable, variables and their indicators was used in this dissertation to provide a means of testing the relationships outlined in the conceptual framework.

This method of analysis allows researchers to understand where important relationships exist and which theorized relationships do not. Data for this model were acquired based on the indicators important to destinations as outlined by the World Tourism Organization (WTO). These indicators include but are not limited to: employment in the tourism industry, the ratio of individuals employed in the tourism industry to overall employment, air quality, drinking water quality, availability of social services in host communities, housing issues, and demographic information. Each indicator recommended by the WTO and available for study in this dissertation were assigned to the driving force, state, or response category, which were defined in the structural equation model as "latent" or unobserved variables and their relationships were examined through structural equation modeling. The results of the analysis illustrate where important relationships between elements of a tourism destination exits, where they do not, and how this influences common concepts of sustainable development in communities managing a tourism product.

Therefore, the research problem being addressed in this dissertation addresses two issues prevalent in discussions of sustainable development: the lack of a theoretical framework that enables the researcher to incorporate the economic, social and environmental elements of a system, and the contextual nature of sustainable development. These issues are addressed with the application of General Systems Theory as a theoretical framework for

understanding the interactions of these three pillars of sustainability. General Systems Theory, alternately, informs the conceptual framework constructed to model the interactions, a model based on the DSR framework and the Plimsoll Line.

Ideally, the conceptual framework developed for this dissertation will have some use in community tourism planning. If planners or those charged with anticipating economic development and growth associated with a tourism product have a simple, easy to use model that uses data easily obtained or collected as part of other studies, they may better be able to inform decisions made about development actions. Future iterations of model development will serve to verify the framework and move it from a reflection of reality to a predictive tool.

In summary, the purpose of this study was to address the apparent lack of a theoretical framework for sustainable development, attempt to the integrate social, economic, and ecological elements of sustainable development; and address the contextual nature of sustainable development. General Systems Theory (GST) was used to serve as a foundation for examining the tourism system in a holistic manner. General indicators of tourism sustainability, as suggested by the World Tourism Organization, were operationalized as a realistic model for Tyrrell County using the DSR and Plimsoll Line concepts in an effort to form the beginnings of a predictive tool for tourism planners.

CHAPTER 2

LITERATURE REVIEW

Currently, I will explore the historical and philosophical background behind the issues of sustainability and sustainable development, both generally and in the context of tourism development. This section is followed by a review of methods for exploring the sustainability of tourism destinations. Finally, a model is proposed for examining sustainable development in a tourism destination.

Sustainability as a concept receives recognition in political and public spheres and drives, at least nominally, recent policies for growth and development at the global, national, and local level. Sustainability initiatives underway in some large cities such as San Francisco (1999) and in Martin County Florida (2005) are increasingly popular, as are online communities that serve communities interested in sustainable development similar to the Sustainable Communities Network (2002). Sustainability as a catch phrase appears to be of recent origin, having been used in the United States in formal policy beginning in the 1960s with the passage of the Multiple Use-Sustainable Yield Act. However, it can be found in ancient philosophies, cultural credos, and more recently in classical economics. For example, the Six Nations Iroquois Confederacy required their chiefs to consider impacts their decisions would have on the seventh generation (Seventh Generation, 2006).

The most current forms of sustainability are based on ideas of resource management that preclude excessive consumption in order to promote inter-generational equity and responsibility. Emphases on economic growth have been sidelined to highlight environmental and, more recently, social sustainability. The specific sustainability of certain industries has been a special focus, as well as the impacts on host communities, such as

timber towns in the Pacific Northwest (Harris, McLaughlin & Brown, 1998) or suburban housing for the workforce of Silicon Valley (City of San Francisco, 1999). The same focus holds true for regions serving tourist populations. Until recently, tourism has been seen as a "smokestack-less industry" (i.e. provides nothing but benefits to hosts and guests and creates no negative impacts) and as a panacea for communities in economic decline. This view has increasingly been negated as both empirical and anecdotal evidence demonstrates the serious social, environmental, and occasional negative economic impacts tourism can bring to a community (Dogan, 1989; King, Pizam & Milman, 1993; Mathieson & Wall, 1982; Wang & Miko, 1997).

Tourism is an ancient human activity and is more pervasive in the global economy than it is given credit. Some industry pundits see the tourism industry when accounting for every sector and sub-sector with a role to play in providing services to the tourist as the largest industry in the world (Goeldner & Ritchie, 2003). It is also seen by many communities experiencing economic difficulty as a way to bring investment into the fold by inviting tourists and their money to experience the authentic (and sometimes inauthentic) culture and environment offered. Communities may find it necessary to limit the extent of the negative impacts associated with tourism. Tourists often create stresses on the environment and host communities in the form of increased traffic, crime, and pollution. Market forces drive and follow tourists and often bring blights on a community (e.g., big-box stores, neon signs, strip malls and souvenir stores). If communities have a need to increase tourist dollars, policies designed to curb growth or create substantive requirements for community planning are set to promote economic development.

Without an understanding of the potential impacts these pro-growth policies have on the economic, environmental, and social fabric of a community, the sustainability of that community is questionable. Therefore, a need exists to understand the complex interplay between the economic, environmental and social dynamics of a community. The purpose of this dissertation is to explore relationships to inform decisions about the sustainability of a community. Specifically, the purpose of this research is to develop a conceptual framework for sustainable tourism development to address: a) the contextual nature of sustainable development; b) the integration of social, economic, and environmental elements of sustainable development; and c) the lack of theoretical framework for sustainable development. The theoretical construct used in this study is General Systems Theory (GST). This construct will provide a basic framework for examining the elements of the tourism system in a holistic manner. The conceptual framework proposed in this study is based on a tool of the shipping industry – the Plimsoll line. An idea originally introduced to sustainability by Daly (1996), the Plimsoll line is a demarcation on the hull of a ship that acts as an optimal loading indicator. Allegorically, the "ship" in this case is a tourism destination, the "cargo" is the state of the elements of the destination, the "engine and fuel" are the forces driving the sustainability of the destination, and the pilot is the response of the destination to the driving forces in the form of policy and informal human action.

Background

The modern concept of sustainable development was brought to the forefront of international development policy in the 1980s when realizations were made by the global community that not only did people exist in a world with limits, but they were fast approaching them. At that time, the United Nations formed the World Commission on

Environment and Development (WCED), as a body of scientists, economists, and political leaders lead by Gro Harlem Brundtland, Prime Minister of Norway to propose strategies for achieving sustainable development (WCED, 1987). According to the WCED's final report *Our Common Future*, commonly referred to as "The Brundtland Report:"

> The concept of sustainable development does not imply…absolute limits but limitations imposed by the present state of technology and social organization on environmental resources and by the ability of the biosphere to absorb the effects of human activities. (WCED, 1987, p. xi)

Although the WCEDs work has received a majority of the attention as the basis of current conversations about sustainability, it was largely informed by the work of the Club of Rome and their seminal work *Limits of Growth* (1972). This coincided with the United Nation Conference on the Human Environment in 1973, a conference focused specifically on the role humans play in shaping the environment and how we are molded by it (UNEP, 1972). Organizations like The Worldwatch Institute, founded in 1975, were formed to highlight and monitor the impacts of population growth (Sustainability, 2006). The goal, according to the aforementioned international groups is to sustain human need within these limits and expand those limits where possible through actions congruent with the principles of sustainable development.

The unfettered amount of economic growth occurring in developed countries and both the lack of economic growth in developing regions and the environmental impacts affecting both the developed and developing worlds resulted in the rise of the modern environmental movement in the 1960s (Bramwell & Lane, 1993; Hardy et al., 2004). According to Bramwell and Lane, the environmental movement was a protest movement that

could be roughly divided into wings. The first wing was the deep ecology movement that advocated a return to historic values and methods as a route toward environmental salvation. The other wing evolved into support of a paradigm shift to sustainable development. The latter wing was defined by a belief that technical progress and change could "help forge a new relationship between man's [sic] wish for economic growth and the need to conserve the environment" (Bramwell & Lane, p. 1). By 1987, the WCED had produced the Brundtland Report, and promoted a major shift in international, state, and local policy not only toward environmental issues but to social and economic issues as well.

The current appeal of sustainability also stems from dissatisfaction with entrenched policies of continuous economic growth and the resulting unequal distribution of both environmental and social benefits and costs, (Bramwell & Lane, 1993; Hardy, Beeton, & Pearson, 2002). In short, many academics and politicians have realized that resources relied upon daily are not limitless (Cooper & Vargas, 2003). The foundation of concepts like sustainability and sustainable development can be traced to both ecology and classical economics.

According to Daly (1996), classical economists envisioned the evolution of the economy as characterized by a steady state. Daly defines the *steady-state economy* (SSE) as one that does not have an increasing amount of resources that move through an economy (i.e., its throughput) to sustain economic activity. An economy has a constant or aggregate throughput with an allocation of resources among competing uses varying in response to market demand. Thus, the economy would evolve from one of continual quantitative growth to one of quantitative development. John Stuart Mill welcomed this evolution and saw it not as the death of human development that other economists saw. Instead, Mill described the

steady state economy as one in which there would be qualitative development (i.e., the art of living) without quantitative growth (i.e., the art of getting on) (Daly). Steady-state economies, however, have until recently been relegated to old economics textbooks. The focus of neo-classical economics on value, utility and efficiency is criticized by Daly as a force that pushed the real costs of resources and labor to the background. The result was a focus on economic growth in the form of wealth creation, primarily in the northern hemisphere. Concepts such as sustainable development and sustainability signified a return to the ideas of Mill, where the quantity of growth, (i.e. how much growth) is less important than the quality of development (Daly, 1996).

Conceptual predecessors of sustainability and sustainable development stem from early concepts of economics As noted above, classical economists believed the human economy would evolve into what they called a steady state. As opposed to a growth economy, which is characterized by net increases in the flow of resources through a system over time, a steady-state economy is one in which the net flow of resources through a system is constant in size. According to Daly (1996), a steady-state economy is characterized by qualitative improvement instead of quantitative growth:

> Qualitative improvement in the use made of a given scale of throughput, resulting either from improved technical knowledge or from a deeper understanding of purpose, is called 'development.' An SSE therefore can develop, but cannot grow, just as the planet earth, of which it is a subsystem, can develop without growing (p. 31).

Sustainable development was born out of the belief that economic growth, although important to communities, has limits. Human ingenuity and evolving technological tools

make it possible to work within these limits to provide for long-term environmental viability (Bramwell & Lane, 1993). The most widely accepted definition of sustainable development was popularized by the WCED (1987). The Commission's report outlined four basic principles of sustainability which include: addressing issues of holistic planning, preservation of essential ecological processes, protection of human heritage and biodiversity, and "development seeking to meet the need of the present generation without compromising the ability of future generations to meet their own needs," (WCED, 1987, p. 8). Ecological systems were to be valued and preserved for their own sake, a concept apparently contradictory to traditional anthropocentric ideas of resource use (Pannell & Schilizzi, 1999).

The report was also revolutionary in that it presented environmental degradation and economic growth as linked incidences. It extended "environmental themes across industrialization, agriculture, energy, and public health" and marked the "introduction of sustainability to the world development literature," (Peterson, 1997, p. 16).

A related definition rooted in economic theory is sustainability as non-declining welfare (de Boer, & Hueting, 2004). A sustainable system is regarded as one that has a subsistence level of income that it is not declining. Sustainability is a form of development that can be achieved if "people have dominant preferences for sustainability" and "blockages, such as the prisoner's dilemma, must be overcome by some form of concerted action" (de Boer & Hueting, p. 39) in order to achieve a sustainable future. The "prisoner's dilemma" is a situation postulated in game theory in which the non-cooperative pursuit of self-interest by two or more parties decreases the quality of their individual and collective lives. De Boer and Hueting defined a system as sustainable if all of the variables used can extrapolated into

the future, using the best knowledge, and showing "that all essential variables converge to non-decreasing patterns" (p. 41).

According to Turner, Pearce and Bateman (1993), definitions of sustainable development can be examined from the perspective of enviro-economic ideologies that are often at odds with each other. Technocentric ideologies offer an image of sustainable development that does not differ from mainstream economic theory and "depends on the adequacy of investment expenditure" (p. 54). This idea of sustainable development is known as "very weak sustainability." Ecocentric beliefs of sustainability based on the ideologies of deep ecologists suggest a sustainable economy is possible only if the scale of the economy and the population are reduced (Turner, et al., p. 31). This conception of sustainable development is known as "very strong sustainability." There are middle-of-the road concepts. "Weak sustainability" highlights a movement to a new accounting system that incorporates the environmental costs of the economy, or a green gross national product. "Strong sustainability" on the other hand encompasses the idea of the steady-state economy, zero economic growth, and zero population growth (Turner, et al., p. 31).

Resource planning and management typically revolves around some concept of sustainability. For example maximum sustainable yield (MSY) applies in range management, agriculture, and fisheries fields. Ludwig, Hilborn, and Walters (1993) provided a critique of resource management policies, especially those touting sustainability. They noted a number of characteristics of resource use and management that lead to resource over-exploitation. The authors suggested a shift in perspective. Instead of thinking of humans as resource managers, it is instead appropriate to think of resources as managing humans is appropriate. Gold rushes, timber harvesting, and fish-stock depletion are examples of this

suggested shift in thinking: "the larger and the more immediate are prospects for gain, the greater the political power that is used to facilitate limited exploitation" (Ludwig et al., p. 17). The authors proposed that scientific consensus about sustainable resource exploitation is impossible because "controlled and replicated experiments are impossible to perform in large-scale systems…some of the time scales involved are so long that observational studies are unlikely to provide timely indications of required actions or the consequences of failing to take remedial measures" and that "many practices continue even in cases where there is abundant scientific evidence that they are ultimately destructive" (p. 36). The authors suggested strategies for resource management to improve the use of scarce resources that include studies of human motivations as integral members of systems, act before confronting uncertainty through research, rely on scientific expertise to recognize problems but not to remedy them. Ludwig et al. warn against claims of sustainability "because past resource exploitation has seldom been sustainable, any new plan that involves claims of sustainability should be suspect" (p. 36).

Holling (1993) critiqued Ludwig, et al.'s (1993) see the concept of sustainable development as harmful to the progress of research into this field. In his retort, Holling suggested Ludwig et al.'s argument against research into sustainable development was flawed because they assumed there is only one kind of science: "reductionist and detached from people, policies, and politics" (Holling, p. 553). Sciences such as evolutionary biology and systems science provide an integrative look into both biotic and human systems. Holling insisted this stream of inquiry "has the most natural connection to related ones in the social sciences that are historical, analytical, and integrative" and are "most relevant for the needs of policy and politics" (p. 553). The problems of resource management need instead to be

examined using an integrative approach keeping in mind the generic features of the problems:

1. They are essentially systems problems.
2. They are fundamentally nonlinear in causation. They demonstrate multi-stable states and discontinuous behavior in both time and space.
3. They are increasingly caused by slow changes reflecting decadal accumulations of human influences on air and oceans and decadal to centuries transformations of landscapes.
4. The spatial span of connections are intensifying so that the problems are now fundamentally cross scale in space as well as time.
5. Both the ecological and social components of these problems have an evolutionary character. (Holling, pp. 532-533)

Regardless of whether a broad-reaching widely accepted definition of sustainable development or sustainability is agreed upon, the primacy of the terms in policy initiatives, institutional goals, and theoretical constructs highlights the need for evaluative methodologies. However, according to Cocklin (1989), problems specific to this need. These problems include issues of geographic and temporal boundaries, the question of what is to be sustained (e.g., a single resource or an integrated system), the quantification of factors in a system (that are not easily quantifiable) and the relationship of sustainability goals to other goals in a system. Similarly, Archer (1996) identified the concept of sustainable development as "acceptable to all but the most purblind and self-interested developers and politicians," but having "major problems" in "defining methods of implementation and in reconciliation of all interests involved" (p. 8). A common theme

among approaches to sustainable development is the need to consider what Cooper and Vargas (2004) call the "living triangle" (i.e., the ecological, social, and economic resources of a community). Mowforth and Munt (1998) echoed this idea. Brundtland emphasized the importance of balancing and integrating the ecological, economic, and social elements of sustainable development (WCED, 1987). To ignore the inseparability of these elements, Brundtland stated, would constitute a grave mistake:

> The environment does not exist as a sphere separate from human actions, ambitions, and needs, and attempts to defend it in isolation from human concerns have given the very word "environment" a connotation of naivety in political circles (p. xi).

Mathieson and Wall (1982) recognized the scope of tourism impacts to exist in the economic, physical (i.e., environmental) and social arenas. Emphasis in research and policy-making, however, has focused primarily on either environmental or economic issues related to sustainability. In some cases, research and policy has been oriented toward an environment versus economic development argument (Cooper & Vargas, 2004). In other cases, the ties between environment and economy have been made, "but the analysis of the economic dimensions of the problem is quite superficial. Also…there is in fact very little reference to the social dimensions of sustainability" (Cocklin, 1995, p. 243). Twining-Ward (1999) highlighted the lack of attention to social aspects of sustainable tourism development as impeding the "progress from principles to practice" (pp. 187-188). Sustainable tourism research according to Hardy et al.. (2004) has often given less attention to social than economic or environmental factors. Farrell (1999) critiqued of policy-making for sustainable development and stated that the glut of funding available to the natural sciences "spurs activity toward the limited biophysical rather than the more inclusive human environment.

This is not how the Brundtland Commission conceived sustainability, but increasingly, this is how it is being perceived" (p. 190).

A separate criticism of sustainable development and sustainable tourism development is that the concepts are not based on a theoretical construct and have not been developed adequately into such framework. While several models of sustainable tourism development, have been developed to address the framework issue, few are based on a theoretical construct.

Sustainable Development and Tourism

Similar to sustainable development, sustainable tourism development was conceived as a reaction to the "unbridled growth of the tourism sector" (Bramwell & Lane, 1993, p. 2) and its impacts on tourism destinations, including the ecological and social foundations. Archer highlighted the multitude of efforts ongoing in the tourism industry to address these multiple interests including the 1990 Tourism Stream Action Strategy Commission of the Globe Conference in Canada (1996). Sustainable tourism development is analogous to sustainable development in that each are equally difficult to define in a universally applicable way. Therefore, they can be difficult to measure in a replicable way (Swarbrooke, 1999). Although the concept of sustainable tourism development has increased in popularity both in terms of academic study and public policy, there is still no consensus "on the precise nature, objectives, applicability or feasibility of the concept" (Twining-Ward & Butler, 2002, p. 364). Butler (1999), analyzed the state of sustainable tourism and found that the most literal definition of the term is "tourism which is in a form which can maintain its viability for an indefinite period of time" (1999, p. 11). Sustainable tourism development, according to Swarbrooke, can be seen as an adaptation of the WCEDs definition of sustainable

development: "Forms of tourism which meet the needs of tourists, the tourism industry, and host communities today without compromising the ability of future generations to meet their own needs" (p. 13). According to Sharpley (2000), evaluating sustainable tourism is seriously weakened because of no theoretical basis for its existence. Its roots are found in the concept of sustainable development, but no connection between this concept and sustainable tourism has been made in the literature. Without a connection between the theoretical framework of sustainable development, the validity of sustainable tourism as a concept is questionable. Although the principles of sustainability are well accepted by a majority of the tourism industry, most tourism development focuses on economic growth and inward, product-centered strategies and not on social or environmental issues (Sharpley).

Thus, the same controversy that exists over a definition for sustainable tourism development as it does for sustainable development. To address this shortfall, Hunter (1997) adapted an approach outlined by Turner, Pearce and Bateman (1993) as popular among some sustainable development advocates that placed sustainability on a spectrum from "very strong sustainability" to "very weak sustainability." In his translation, Hunter provided a sustainable tourism development spectrum from tourism imperative (i.e. very weak sustainability), to product-led tourism, to environment-led tourism, to neotenous tourism (i.e., very strong sustainability). This approach found popularity with other tourism researchers, (as cited in Hardy et al., 2004), such as Carlsen (1997) and Coccossis (1996).

Tourism development was seen in two growth paradigms evident after World War II (Bramwell & Lane, 1993). The first according to Oppermann (1993) was the diffusionist paradigm, which could be divided into the development stage theory and the diffusion theory. Development stage theory was based on the notion of unilinear change, indicating

that tourism destinations in less developed countries were in an "earlier stage" of development, and that the economic growth resulting from tourism would advance their country. Diffusion theory, similarly, employed the trickle-down effect of tourism dollars to a community. This effect which would "lead eventually to an adjustment of the regional disparities after initial polarization" (Oppermann, p. 538). Tourism was seen as an instrument of development.

At the other end of the economic development paradigm spectrum was dependency theory. From a tourism development perspective, this theory critiqued the use of tourism as a development agent. Development, for advocates of this paradigm, was not linear but holistic. Development driven by capitalism in the core "continuously creates and perpetuates underdevelopment in the periphery" (Oppermann, 1993, p. 539). According to Tordaro (1997), the internal and external political, institutional, and economic structures of developing countries keep them dependent on developed countries. "It was out of this dependency paradigm" according to Hardy et al. (2004), "that sustainable tourism could be said to have emerged directly, as it precipitated anti-developmental and limits to growth arguments" (p. 485). Therefore, a more holistic approach to tourism development was required that addressed economic, environmental, and social issues.

Economic, Environmental and Social Issues of Sustainability

Neoclassical economic theory is the dominant approach used by social scientists and policy makers to address resource issues (Emel & Peet, 1989). Neoclassical economics suggests the concept that the only limits to economic growth are those people create. According to Daly (1996), these limits are nonphysical and include technology, preferences, and distribution of income. The physical variables of goods produced and resources needed

"must be adjusted to fit an equilibrium determined by those nonphysical parameters" (Daly, p. 4). This adjustment always involves growth. Sustainability in this context is an ability to "maintain economic viability…in the face of economic fluctuations, changes in the patterns of trade and government policy, as well as environmental degradation" (Cocklin, 1995, p. 244). In other words, sustainability is "the maximization of human welfare over time" (Harris, 2000, p. 7). The impacts of this maximization are acceptable if the benefits derived from sustainability are enough to compensate for damage or ease the complaints of the disenfranchised (Mowforth & Munt, 1998).

The primary beliefs of environmentalism are steeped in principles of natural sciences. Limits in ecological systems prohibit the expansion of species beyond the system's ability to support expansion (Leopold, 1949). These limits are imposed by the laws of population ecology and thermodynamics. The First Law of Thermodynamics states that although energy can be transferred from one system to another, it can neither be created nor destroyed. It is always constant. The Second Law of Thermodynamics states that energy can move in only one direction and that natural processes are irreversible (Pidwirny, 2004). What these laws mean for the concept of environmentalism is "sustainability must involve limits on population and consumption levels" (Harris, 2000, p. 12). Although energy is constant, it is always evolving into a form that is less efficient and un-ordered (i.e., ever-more unusable by humans). Environmentalism also places an intrinsic value on the natural environment independent of those values placed on it by the human economy.

These two perspectives highlight the difference between what are known as "weak" sustainability (i.e., neoclassical economics ideas of limits), and "strong" sustainability (i.e., environment-oriented ideas of limits). According to Common and Perrings (1992), the

respective perspectives seemingly address the different phenomena of resource use versus resource preservation. This rift between paradigms of sustainability are often blamed for the inability of decision-makers to work toward plans and measures of sustainability (Cooper & Vargas, 2004).

When viewed in a more holistic manner, the of resource use versus resource preservation is much more conciliatory. The Organization for Economic Cooperation and Development (OECD), an international multi-government cooperative that helps governments respond to economic development issues by providing statistics and policy recommendations, provides evaluations of countries' economic trends, policies, and performance (OECD, 1997). The OECD has extended this role into environmental performance evaluations through their Pressure-State-Response framework: "human activities exert pressures on the environment and change its quality and quantity of natural resources. Society responds to these changes through environmental, general economic and sectoral policies" (OECD, 1997). Despite the efforts of the OECD to bridge the environmental-economic divide, the apparent inability to functionally bridge the rift between economics and environmentalism has left human progress in a paradigm of economic growth and development.

The social component of sustainable development, therefore, becomes important because the values set by societies and institutions dictate the use of the environment and the requirements for economic growth. For Harris (2000) this dilemma means revisiting the human development perspectives of classical economic theory. Human development "emphasized issues of basic needs and equity" (Harris, p. 15). Whereas modern (neoclassical) economics has a wealth-orientation that tends to exclude the many for the

benefit of the few, classical economics of John Stuart Mill and Adam Smith focused more on the "real" cost of resource use and distributive limits (Daly, 1996). According to Andand and Sen (1994):

> The interest in human development had to compete with other priorities and pursuits within the body of mainstream economics. The preoccupation with commodity production, opulence, and financial success can also be traced in economics through several centuries…Indeed, the dominant contemporary tradition of focusing on such variables as per capita gross national product or national wealth is a continuation – perhaps even a continuation – of the old opulence-oriented approach. (pp. 5-6).

In a tourism context, the economic, social, and ecological concerns of development have been examined from separate, not holistic, approaches. Ecological impacts of tourism have been explored by Mathieson and Wall (1982), Gunn (1994), and Farrell and Runyan (1991). Buckley (2003) and Wang and Miko (1997) explored the environmental impacts tourism had on parks in the United States and Australia. These approaches focused primarily on the environmental impacts of tourism on national parks and other natural resource-based attractions.

Economic approaches to tourism development are also numerous. English, Marcouiller, and Cordell (2000) studied the economic dependence of rural destinations on tourism by estimating the number of jobs and income that were generated from visitors. Clarke and Ng (1993) used economic welfare and efficient pricing to explore the costs and benefits to residents and the environment. Tisdell (1987, 1998) highlighted the valid point that the economics of any tourism destination should be considered carefully because an unprofitable destination is sustainable only if it is subsidized by government interests.

Studies of tourism impact on host communities and community involvement in tourism planning and development are the earliest manifestations of the social element of the living triangle in tourism development literature. The Community Tourism Product first introduced by Murphy (1985) as an approach to tourism planning and development that included traditional planning considerations (i.e., resources, facilities, etc.) with the addition of how the community wanted their product presented to the market. Although natural resources and accessibility to those resources and to their potential markets are considered paramount by Murphy (1985) to the success of a destination, "the presence of resources and a potential market…do not necessarily make a viable industry" (p. 37). Without the hospitality of the host community the destination's success is in jeopardy. Hospitality according to Murphy is dependent upon tourism development that takes into consideration the social and cultural needs of the host. Four consideration areas provided the structure for the Community Tourism Product: environmental and accessibility considerations, business and economic considerations, social and cultural considerations, and management considerations.

Doxey's (1976) Irridex model of the stages of resident acceptance of visitors, Dogan's (1989) five stages of adjustment to tourism by residents, and Bulter's (1980) destination life cycle model have all addressed the experiences of residents with tourism development. Resident involvement in tourism planning and management also addressed the social aspects of tourism in that residents are part of the hospitality atmosphere of a destination and therefore, key in the sustainability of the destination (Simmons, 1994). Bramwell and Lane (2000) saw the destination resident as both a resource and a partner in sustainable tourism in arguing that community involvement in tourism planning lessens the likelihood that residents will feel alienated and oppose development. Negative impacts on

communities are minimized and economies, in some cases, can be revitalized (Ap, 1992). Central to this idea is the resident as a stakeholder. Sustainable tourism development according to Hardy et al. (2004) is "a concept conditioned by social context, in order for it to be met, stakeholders must be identified and their subjective needs met" (p. 488). However sustainable tourism development research and policy-making gives local communities less attention than the economic and ecological elements (Hardy et al..). Recently, the importance of including community, culture, and social sustainability in tourism planning has been recognized. An approach from the social science perspective is necessary in this paradigm of sustainability. According to Payne, Johnston and Twynam (2004):

> Because social sustainability more obviously involves people…approaches to defining sustainability in operational terms that ignore people and their use of the natural environments might be considered suspect." (p. 319)

A living triangle is necessary or what Giovannini (2004) termed the "three pillar approach" to sustainability. This approach emphasizes that "economic, social, and environmental systems must be simultaneously sustainable in and of themselves" (Giovannini, p. 9).

According to Mowforth and Munt (1998), sustainability "is not definable except in terms of the context, control and position of those who are defining it" (p. 105). The concept is site-specific which necessitates definitions particular to the destination (Hardy et al., 2004; Manning, 1999). In 1995, the World Tourism Organization (WTO) constructed a general set of indicators for sustainable tourism designed to address the economic, social, and ecological elements of a tourism destination, but chose not to provide a specific definition of sustainable tourism. According to Manning (1999), the WTO argued that sustainability is site specific and should be defined on a case-by-case basis. The National Research Council (1999) also

noted in a report published on sustainable development that threats to sustainability are site specific and have distinct social and ecological attributes. In their examination of the Promoting Action for Sustainability through Indicators at the Local Level in Europe (PASTILLLE), Astleithner and Hamedinger (2003) demonstrated that a multi-faceted examination of the processes and products of the locality needed to be considered. For example, the details and processes of governance, the relationships between political actors, and the institutions of the political culture provide the context in which the local concept of sustainability and its related indicators are understood (Astleithner & Hamedinger). In a forum discussion of the nature of ecological research and its role in sustainable natural resource management, Meyer and Helfman (1993) argued that sustainable systems are anything but globally applicable; instead, they "require adapting to the local situation, which relies upon understanding ecological, social, and cultural conditions" (p. 570).

The context or "place" "provides the conceptual and operational framework in which progress in the integrative understanding and management is possible" (Twining-Ward & Butler, 2002, p. 266). In their study of sustainable tourism development implementation in Samoa, Twining-Ward and Butler developed indicators based on community participation and input. Therefore, the involvement of residents (i.e., stakeholders) in sustainable tourism development is critical. Pepperdine and Ewing (2001) stated:

> Stakeholder involvement is an essential ingredient, for it allows the identification of locally relevant and meaningful indicators and, subsequently, the development of a locally specific management strategy. This can better assist decision making by providing a framework to enable individuals and decision makers to recognize the outcomes of their decisions in terms of their stated sustainability goals. (p. 77)

To incorporate the social, ecological and economic elements of a tourism destination into a sustainable tourism development plan, a holistic approach must be taken. General Systems Theory may provide such an approach.

General Systems Theory

Background

General Systems Theory (GST) is a way of approaching phenomena from a holistic rather than reductionist mode of thinking (von Bertalanffy, 1968; Checkland, 1993). This holistic, or systems approach, is not a recent theoretical advancement. Aristotle may have been the first to argue that a whole is more than the sum of its parts. A system can be defined simply as an inter-related set of elements (von Bertalanffy, 1968). Although Ludwig von Bertalanffy is recognized as the GST movement's founder, the idea of systems in the different scientific disciplines developed almost simultaneously among physicists, chemists, biologists, and social scientists (von Bertalanffy; Checkland). According to von Bertalanffy, the physicist Kohler theorized systems in physics by trying to translate the general principles of inorganic systems to organic systems. A statistician, Lotka, conceived of communities as systems, but individuals as sums of cells (von Bertalanffy). As stated by Checkland, biologists such as von Bertalanffy were among the first to pose the idea of thinking in terms of wholes and then broadening this view to any kind of phenomena. Specifically, the "systems movement" developed as a result of the tension between reductionist and holistic thinkers. Biologists were the first to address issues of wholeness within their own discipline.

After the scientific revolution of the 17th century, a new approach to the examination of the earth's phenomena also emerged. Descartes, according to Checkland (1993), used a reductionist approach to explain how the complex nature of the world could be reduced to a

more simple form. Checkland credited Descartes with an approach to the study of phenomena that governed scientific inquiry for three centuries: "the second [law was] to divide each of the difficulties that I was examining into as many parts as possible and necessary in order best to solve it" (p. 46). Thus, it was logical to "reduce it to some separate areas which we can examine separately" (Checkland, 1993, p. 60). Accordingly, Checkland claimed that science up to that point had been reductionist. The scientific method was used to reduce the phenomena of the world into more easily observable portions, as the world is complex and "messy." Science is reductionist because "there is much to be gained in logical coherence by being reductionist in explanation, accepting the minimum explanation required by the facts to be explained" (Checkland, 1993, p. 52).

The "tension" between reductionist and holistic thinking is found not only in how the world is examined, but in how the disciplines are organized as a fundamental aspect of how the world is studied. Biologists, according to Checkland (1993), are at the forefront of this discussion because the discipline of biology is an "unrestricted" science based on a foundation of principles from the "restricted" sciences of chemistry and biology. A restricted science is defined by Pantin (1968) as one that is defined by a limited range of studied phenomena. In a restricted science, reductionist experiments in a laboratory are possible and may lead to hypotheses that can be tested and re-tested by more experiments and quantitative measures. In an unrestricted science (i.e., biology or geography), the phenomena under study are highly complex and "designed experiments with controls are often not possible. Quantitative models are more vulnerable and the chance of unknown factors dominating observations is much greater" (Checkland, p. 65).

While the restricted sciences (i.e., chemistry, physics) deal with the complexity of atoms and molecules, the unrestricted sciences like biology and the social sciences of psychology and sociology attempt to explain levels of complexity in the world that may or may not adhere well in a reductionist environment (e.g., the cell, the human body, families, cultures, and societies). The unrestricted sciences approach the study of phenomena that can be characterized by organized conglomeration arranged according to a complex hierarchical structure. In essence, it has "proved insufficient to deal with theoretical problems, especially in the biological sciences…" (von Bertalanffy, 1968, p. 11). The human body as a system cannot be accurately explained by the function of the digestive system alone. Similarly, the geography of southern California cannot be generalized to its coastline, and a society cannot be defined by its wealthiest members.

According to many systems scientists, a reductionist approach alone has not succeeded in addressing the complexity of social phenomena. To highlight this complexity, Checkland (1993) outlined characteristics of "social reality," which distinguish them from the characteristics of those of the physical world (i.e., that world more easily examined with restricted science). First, any generalizations made about experimental results in the social sciences are imprecise because the number of possible viewpoints and interpretations of data are abundant. For example, scientists can categorize the cells of the human body according to their function because of specific guidelines available to produce repeatable results. Alternatively, it is not so simple for different judges to assign the same sentence to one criminal because some judges take into account the background of the criminal while others do not (Checkland, 1993).

Second, the nature of the subject being studied by the social scientist is different from the subject under study in a chemist's lab. Checkland (1993) provides this example:

> The chemist studying the properties of ammonia has no way of telling one ammonia molecule from another; he can assume total similarity between the properties of one molecule and the next, and he can be totally confident that he can conduct the experiment he wants: the individual molecules will not manipulate him! (p. 69)

Alternatively, a social scientist must always be aware that the act of studying social phenomena cannot make such an assumption.

Third, making predictions of "social happenings" is problematic for the social scientist due to the complexity of the subject being studied. Primarily, this complexity can be attributed to occurrences in a social system that are due to what Checkland calls intended and unintended effects. However, another complexity of social systems that does not occur in physical systems is that physical systems do not react to predictions made about them, but social systems can.

An important aspect of the tension between holism and reductionism must be addressed. An acceptance of a holistic view of phenomena does not preclude the use of reductionist tools. On the contrary, the tools of the reductionist approach are crucial in understanding the nature of phenomena. If reductionist approaches aid in the understanding of the interactions between the parts of a system then these approaches will prove invaluable. However, the paradigmatic belief in the infallibility of a reductionist approach has contributed to the limited nature of an understanding of the complexities of higher order biological systems (i.e., ecosystems) and human behavior. What is required is an approach to the study of physical and social phenomena that embraces both and recognizes strengths and

weaknesses, allowing one to compensate for the weaknesses of the other. A systems approach is the next order of complexity in the evolution of the disciplines. In von Bertalanffy's words, "problems of wholeness, dynamic interaction and organization" (1968, 31) appear in physics, biology, physiology, and psychology. An organismic approach is necessary:

> It is necessary to study not only parts and processes in isolation, but also to solve the decisive problems found in the organization and order unifying them, resulting from dynamic interaction of parts, and making the behavior of parts different when studied in isolation or within the whole. (von Bertalanffy, 1968, p. 31)

Gestalt, or the whole being greater than the sum (or product) of its parts is a central tenant of GST. According to Sutherland (1973), there are four tenants of GST (Table 2.1). These tenants, particularly the first two, form the basis of understanding for the current study. A tourism system is more than simply a destination's attractions. Rather, it is the transportation system, information system (e.g., travel agents, chambers of commerce), services, accommodations, the infrastructure, and the natural environment. Taken separately, these things are not the destination. Together, they complete the destination.

Table 2.1. Tenants of GST,

1. Nonmechanical "wholes" are not simple sums (or products) of the properties of their parts.
2. A preference for a holistic as opposed to a reductionist analytical modality when treating the 'organic' or 'open' systems which predominate in the social or behavioral sciences.
3. The concentration on macro-determinancy as an isomorophic property of many (or most) complex systems, and as a fundamental point for analytical departure
4. The employment of ideal-types, taxonomies and typologies as the fundamental vehicles for the advancement of science in complex phenomenal domains.

Note: Adapted from *A General Systems Philosophy for the Social and Behavioral Sciences* by J.W. Sutherland (1973).

Macro-determinancy described by Sutherland (1973) is a characteristic of a system in which the "system can be treated as deterministic at the higher levels, but where the lower-order components of the system may not admit to determinacy" (p. 40). An example of macro-determinancy is the dilemma of resolving patterns in higher-level phenomena into local events, a central question in the field of quantum physics (von Bertalanffy, 1968). Isomorphic properties, according to von Bertalanffy and Sutherland are the structural similarities that exist between different fields. Von Bertalanffy used the example of the exponential nature of population growth "of bacterial cells, to populations of bacteria, of animals or humans, and to the progress of scientific research measured by the number of publications in…science" (1968, p. 33). The entities are different (e.g. bacteria vs. animals vs. publications) as are the causes of their propagation. Regardless, the mathematical law governing their growth is the same.

Checkland (1993) argued that systems thinking is grounded in two sets of ideas: emergence and hierarchy, and communication and control. Emergence and hierarchy address the issues of complexity in systems, which again are characterized by the interrelationships of elements in a defined set. As stated previously, a systems approach is a way of looking at phenomena from a holistic perspective. The whole is greater than the sum of its parts. According to von Bertalanffy (1968), this statement implies that "constitutive characteristics are not explainable from the characteristics of isolated parts. The characteristics of the complex, therefore, compared to those of the elements, appear as 'new' or 'emergent'" (p. 55). Or, when examining any level of a system, characteristics of higher levels that cannot be explained "solely by reference to lower levels" (Clayton & Radcliffe, 1996, p. 18). To

illustrate, von Bertalanffy distinguished between emergence and "physical summativity" in phenomena. An object or system that exhibited physical summativity can be:

> built-up, step by step, by putting together the first separate elements; conversely, the characteristics of the complex can be analyzed completely into those of separate elements. This is true for those complexes which we may call 'heaps," such as a heap of bricks or odds and ends. (p. 67)

Conversely, a biological system like a human body is not equal to a heap of cells. The system is equal to the interactions of those cells that create a heartbeat, a nervous reaction, a thought. Biological phenomena according to von Bertalanffy are characterized by this attribute of emergence:

> You will always find that the behavior of an element is different within the system from what it is in isolation. You cannot sum up the behavior of the whole from the isolated parts, and you have to take into account the relations between the various subordinated systems and the systems which are super-ordinated to them in order to understand the behavior of the parts. (p. 68)

Biological phenomena also exhibit an increasingly complex hierarchical order of complexity in their make-up. Molecules give way to organelles, organelles to cells, cells to organs, organs to the full organism. With each level an increased amount of complexity is characterized by not only the sum of the components of the previous level but the emergent characteristics of the previous level's complexity. The mere presence of a heart, lungs, stomach, and kidneys does not make an organism, but the interactions of those elements does form a human being. This characteristic of systems is known as hierarchy. Interestingly, this ordering can also be used to describe the way restricted and unrestricted sciences organize

themselves. Physics can explain the mass, energy, and force of a molecule, but chemistry is necessary to explain the characteristics of the chemicals and their interactions as molecules. Chemistry can help explain the reactions of chemicals within a cell, but biology is needed to explain the grouping of cells to form organs or the splitting of cells in mitosis. Biology may help explain the process of a sunburn, but would fall short in explaining a societal preference for tan skin (Checkland, 1993).

This organized increasingly complex hierarchical structure is the subject matter of the systems discipline, and "the general model of organized complexity is that there exists a hierarchy of levels of organization, each more complex than the one below, a level being characterized by emergent properties which do not exist at the lower level" (Checkland, 1993, p. 78). For von Bertalanffy (1968), this hierarchical structure "is characteristic of reality as a whole" (p. 74). How hierarchies are controlled refers to the new functional relationships each level places on the dynamics of the level just below it. These controls can be positive or negative and dictate the growth or constraint of a system. (Clayton & Radcliffe, 1996).

To describe the ideas of communication and control in a system, one must understand the notions of *open systems* versus *closed systems*. Closed systems are characterized by a set of components that are in a state of equilibrium (von Bertalanffy, 1940, 1968; Checkland, 1993). A closed system behaves according to the second law of thermodynamics. The equilibrium within a closed system is defined by a high level of entropy and a low level of energy. It requires no energy to function and produces no energy (von Bertalanffy, 1968, Clayton & Radcliffe, 1996). Open systems are defined as those that are open to their environment and import and export material (i.e., energy, information). For a complex

hierarchical structure to function and maintain its structure, a set of processes is necessary "in which there is *communication* of information for purposes of regulation or *control*" (Checkland, p. 83). According to Clayton and Radcliffe:

> …living systems and ecological hierarchies of living systems must have processes of communication and control so that they can monitor and respond to, and in that way resist, the perturbations of a real-life environment…Effective control, in a changing environment, requires that systems have control mechanisms with a variety of response that can match the variety of environmental information. (p. 20)

This characteristic of the system is known as the Law of Requisite Variety, a principle developed by Ashby in 1956 in his study of a sub-discipline of systems. Cybernetics is the study of messages and message control in a variety of circumstances. Cybernetics states that the more information or tools available to a system, the more able it is to compensate for any perturbations or knocks it receives from the environment (Checkland; Clayton & Radcliffe, 1996; Heylighen, & Joslyn, 2001). A system under control has this variety of information available, and the control processes in a system depend on communication, "upon a flow of information in the form of instructions or constraints" (Checkland, p. 88).

Thus, the control of communication within a system requires feedback, the "transmission of information about actual performance" (Checkland, 1993, p. 85) or the chain of causal connections in a system (Clayton & Radcliffe, 1996). Feedback constitutes the messages transmitted between elements in a system and among levels in a hierarchy. The manner in which information coded in those messages is received and translated will dictate the messages returned to the system. Positive feedback, for example, will amplify the action being transmitted. Negative feedback will control growth. (Clayton & Radcliffe, 1996).

These feedback loops, according to Clayton and Radcliffe, are the "core of the process of communication" in systems (p. 19).

General Systems Theory and Sustainability

The applicability of system science to the study of sustainable development is examined by the lessons of systems compiled by Meadows (2001) and the declared principles of sustainable development assembled by Cooper and Vargas (2004) based on the synthesized results of international sustainable development conferences. Table 2.2 provides a brief comparison.

Table 2.2. Congruence between system science and sustainability.

Cooper & Vargas (2004)	Meadows (2001)
Transparency and Accountability Democracy, transparency, and accountability of partners in sustainability policy-making	*Locate Responsibility in the System* Look for ways the system creates its own behavior. *Honor and Protect Information* Systems work better and with ease if you can give them more timely, accurate, and complete information.
Inter- and Intra-Generational Equity The rights of current and future generations to quality of life and self-determination is essential to sustainable development.	*Expand Time Horizons* The longer the time horizon, the better the chances for survival. *Expand the Boundary of Caring* Interconnections make more and practical rules the same.

Note: Adapted from *Implementing Sustainable Development: From global policy to local action*. by Cooper, P & Vargas, C.M. (2004) and "Dancing with Systems" by Meadows, D. (2001, Winter). *Whole Earth,* 58-63.

In another application of system science to sustainability, Clayton and Radcliffe (1996) spoke of the central problem of sustainability in terms of phase space:

> The very complex system that constitutes the planet, which contains a number of interacting complex sub-systems such as biological, ecological, social and economic systems and so on, can be represented at any time as a point in a high dimensional phase space whose axes are the control variables and whose coordinates are their current values. (p. 44).

To illustrate this phase space of sustainability graphically, a two-dimensional representation is presented in Figure 2.1. The shaded "sustainability region" of the phase space is the "intersection of the sustainable or survival regions of all systems necessary to continued human existence" (Clayton & Radcliffe, p.43).

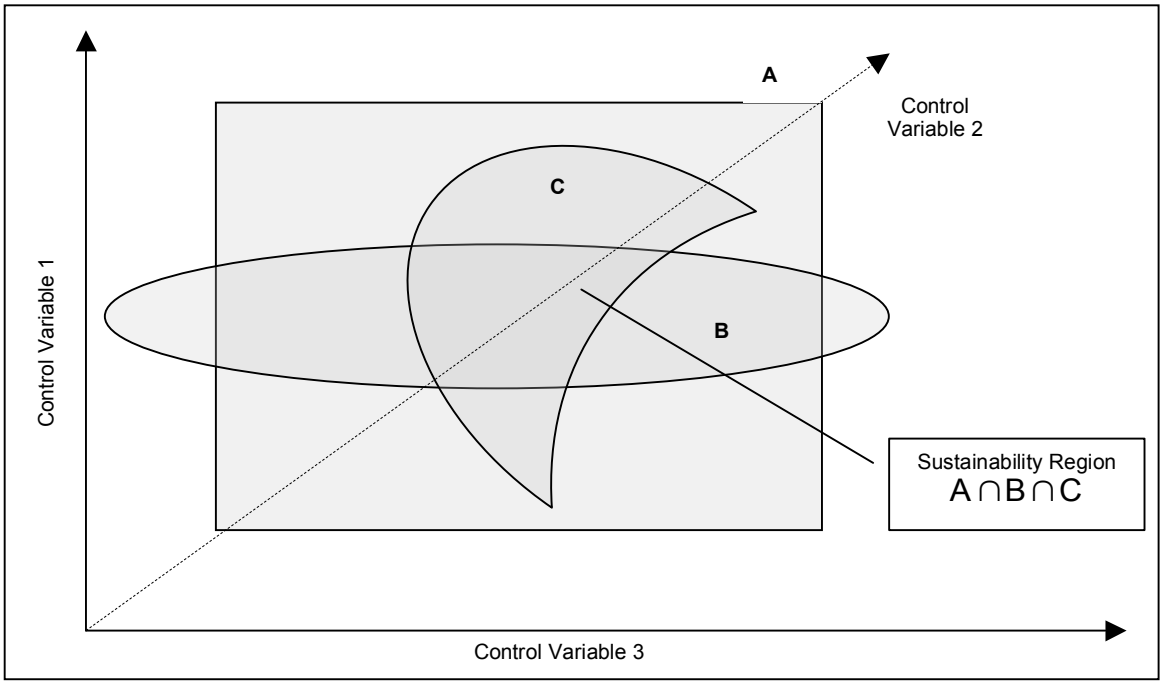

Figure 2.1. Phase space of sustainability

Note: Adapated from *Sustainability: A Systems Approach* (1996). By Clayton, A., & Radcliffe, N.

The model of the phase space of sustainability depicts three subsystems. In this example, the systems are A (economy), B (society) and C (ecology). In general, subsystem A can tolerate

a wide range of fluctuations. However, subsystems B and C have limited regions for survival. Therefore, the "region" where the system has the highest probability of being sustainable is within this $A \bigcup B \bigcup C$. Again, the living triangle of economic, social, and ecological considerations becomes important to the sustainability of a system.

Sustainable Tourism Systems

A sustainable tourism system, with the elements of economy, society, and ecology can be approached from this phase space perspective. Tourism is highly dependent on healthy environments, societies, and economies and its development requires consideration of these elements (Tisdell, 1998). Harris (2000), and Mowforth and Munt (1998) provided definitions of these different subsystems within the tourism system in terms of their sustainability. Harris described environmental sustainability as:

> An environmentally sustainable system must maintain a stable resource base, avoid over-exploitation of renewable resource systems or environmental sink functions, and depleting non-renewable resources only to the extent that investment is made in adequate substitutes. This includes maintenance of biodiversity, atmospheric stability, and other ecosystem functions not ordinarily classed as economic resources. (Harris, p. 6)

Mowforth and Munt defined social sustainability as:

> The ability of a community, whether local or national, to absorb inputs, such as extra people, for short or long periods of time, and to continue functioning either without the creation of social disharmony as a result of these inputs or by adapting its functions and relationships so that the disharmony can be alleviated or mitigated. (Mowforth & Munt, p. 106)

Mowforth and Munt also detailed economic sustainability as:

> A level of economic gain from activity sufficient to either cover the cost of any special measures taken to cater for the tourist and to mitigate the effects of the tourist's presence or to offer an income appropriate to the inconvenience caused to the local community visited – without violating any of the other conditions – or both. (Mowforth & Munt, p. 111)

A systems approach to tourism development is not revolutionary. Gunn (1994) was among the first in the tourism research arena to address the idea of a functioning tourism system as it related to the tourism industry and sustainability. According to Gunn, "every part of tourism is related to every other part" (p. 33). The functioning tourism system (FTS) is based on the supply-side of the overarching tourism industry. The elements of the FTS are couched within the definable sectors of the tourism industry (i.e., private enterprise, nonprofit organizations, and government) and are managed for the visitor. One critique of this approach is the absence of the social element of sustainability. Although Gunn sees the community, cultural resources, and governmental policies as important, they are external to the FTS.

Sessa (1998) explored tourism planning from a GST perspective. He saw the tourism system as a dialogue among the ecological, environmental, and social members. If not planned and managed correctly, this exchange can cause degradation and deterioration of the resources on which the system depends for survival. That said, Sessa also saw the tourism system as a behemoth and advocated a regional approach for manageability. Sessa contended that "the scale of a region permits a particular project to establish more objectively what might be its effects and impacts on the land as well as on the socioeconomic and

cultural structures" (pp. 223-224). Tourism was an open system for Sessa, and must be looked at from a "holistic and not reductive" manner that included "the flows of interrelations in the region's space and in time to have long term viability" (227).

A systems approach to tourism was also used by Carlsen (1999). Instead of defining a region for studying the tourism system, Carlsen focused his application on islands. A confounding factor in tourism, and one that makes tourism ideal for a GST approach, was the ultimate resource for the industry – the natural environment – provided both the sources of attraction for tourists and the production of goods needed for the industry. While Sessa (1998) maintained a theoretical approach to GST application, Carlsen provided a methodology based in a sub-theory of GST known as Soft Systems. In Soft Systems there is a learning cycle that is a seven-step process designed to analyze the "cultural, social, political, and environmental issues that are invariably associated with tourism development" (p. 324). As seen in Table 2.3 this process is designed to be a collaborative process requiring the cooperation of all members of the tourism system: industry members, governmental representatives, nonprofit organizations, land management agencies, residents, etc.

Table 2.3: The Seven Steps of the Soft Systems Learning Style.

The Seven-Steps of the Soft Systems Learning Cycle	
1.	Enter the situation considered problematical.
2.	Express the problem situation.
3.	Formulate root definitions of relevant systems of purposeful activities.
4.	Build conceptual models of the systems named in the root definitions.
5.	Compare models with real-world actions.
6.	Define possible changes which are both desirable and feasible.
7.	Take action to improve the problem situation.

Note: From "A systems approach to island tourism destination management," by Carlsen, J. (1999) *Systems Research and Behavioral Management, 16*, 321-327.

Steps three and four of the learning cycle are designed to create a definition of sustainability in the tourism system and build a model based on that definition – the "systems thinking" part of the model. Carlsen represents a school of thought in sustainable systems thinking that maintains that sustainable system is a contextual concept. Definitions and perceptions of sustainability depend on the culture in which the system persists. Root definitions of sustainability are designed to guide models that will be used to create a sustainable system within the abilities of the host population and limits of the destination.

The soft system learning cycle provides some guidance for developing a destination-specific root definition of sustainability specifically designed to include the tourism system. This criterion is known as CATWOE: Customers, Actors, Transformation process, Weltanschauung, Owners, and Environmental constraints (Carlsen, 1999). A more detailed definition of each step is described in Table 2.3. The conceptual model of the tourism system is designed based on the CATWOE criterion. After the "systems thinking" is conducted according to the CATWOE criterion, a "reality check" is conducted to determine how well the proposed solution aligns with real world problems.

Table 2.4 The CATWOE Criteria for the Soft System Learning Cycle

C	Customers: victims/beneficiaries of the tourism activity. Includes the host community and the visiting tourist. A system that satisfies the needs of these customers should be addressed.
A	Actors: those who undertake the activities. Public sector and private sector agencies that control tourism development; the developers; the proponents/opponents of tourism.
T	Transformation process: the activity which transforms an input into an output; the development of natural resources. An input would be the natural/human resource available in a destination, and an output would be sustainable tourism development.

Table 2.4 Continued

W	Weltanschauung: the world view that makes the definition meaningful and which incorporates the values and beliefs of those involved.
O	Owners: those who control the activities. Land owners, government agencies.
E	Environmental constraints: the limits of the open system. They include land and water availability, infrastructure.

Note: From "A systems approach to island tourism destination management," by Carlsen, J. (1999) *Systems Research and Behavioral Management, 16*, 321-327.

Carlsen (1999) and Sessa (1988) referred to tourism as a system of interconnected parts operating in a dynamic structure. The stability of the structure depends upon the movement of information and resources through the system in an efficient and equitable manner. In the spirit of isomorphy characteristic of GST, the structure of the sustainable tourism system can be found in an idea borrowed from shipping: the Plimsoll Line – a concept that will be described in more detail later in this chapter.

Approaches to Modeling Tourism Development

The literature is rich with attempts to model sustainable tourism development and efforts to create measures that indicate progress toward sustainability. These include applications of the concept of carrying capacity to tourism destinations (e.g. Lindberg, McCool & Stankey, 1997), the Limits of Acceptable Change framework (e.g. Ahn, Lee, & Shafer, 2002) as well as computer-based modeling systems (e.g. Walker, Greiner, McDonald, & Lynne (1999) and econometric models (e.g. Johnson & Tyrrell, 2005). Although these studies attempt to answer the same questions, none of the approaches addresses all of the questions in the same manner.

According to Johnson and Thomas (1996), the application of carrying capacity to tourism development modeling began when Butler (1980) claimed that destinations have

visitor capacities. Once these capacities were reached, visitation declined. Formerly a range management tool, carrying capacity was translated into outdoor recreation management and translated again to tourism. Although the extent of research in tourism carrying capacity is copious (Lindberg, McCool, & Stankey, 1997), the translation into practical application and policy (or even a clear concept of its meaning) have been foggy (Johnson & Thomas, 1996). Carrying capacity is a concept not without controversy in the social sciences, and has been criticized "in its restricted view of human-environment linkages, and in largely ignoring the role of institutions" (Brown, Turner, Hameed, & Bateman, 1997).

Tourism carrying capacity, like recreational carrying capacity, is composed of a spectrum of sub-capacities that also remain practically ambiguous. For example, Johnson and Thomas (1996) highlighted the different definitions available for the physical carrying capacity of a destination: the capacity of the system to provide services or the capacity of the area to absorb tourists. Newsome, Moore, and Dowling (2002) underlined the different experiential carrying capacities of the myriad of visitor types who visit a destination. Although the goal of the concept is purportedly to provide an objective measure of the capacity of a resource to absorb use without exhaustion, this goal is inherently subjective (Lindberg et al., 1997). Ultimately, the criteria used to determine when the capacity of a tourist resource has been reached are value judgments. Carrying capacity was seen as a reductionist philosophy that was "inappropriate…upon which to base actions that protect recreational settings or tourism dependent communities" (McCool & Patterson, 2000; as cited in Newsome et al., 2002).

Providing a more positive critique of carrying capacity, Murphy (1985) saw the concept as a useful framework "for analysis and assessment that could be used to make more

informed decisions" (p. 85). In his critique of tourism carrying capacity, Buckley (1999) suggested the Limits of Acceptable Change (LAC) framework as adequate and more easily convertible to operational application. According to Newsome et al. (2002), the LAC framework provides "a process for deciding what environmental and social conditions are acceptable and helps identify management actions to achieve these conditions" (p. 162).

The limits of acceptable change framework accepts the notion that decisions made about resource use are inherently subjective. Including stakeholders and managers in the planning process is essential. Stakeholders provide expertise about impacts and possible management actions to reduce them. LAC is a process involving detailed description of the setting and issues being managed. Indicators are selected to measure the current state of the resource, the social conditions surrounding it, and the acceptable standards for the resource (Newsome et al., 2002). The LAC framework has been applied in a tourism setting by Ahn, Lee, and Shafer (2002) where first three steps of the process were defining the issues and concerns important to stakeholders, determining the opportunity classes or zones, and selecting indicators of resource and social conditions. Specifically, Ahn et al. examined how residents differed from zone to zone according to their feelings about tourism and what kind of tourism they thought was appropriate for their area. Ahn et al.. also examined how residents perceived the conditions in their communities and how they perceived tourism changing those conditions. The authors concluded that this important information was crucial to enabling stakeholders to make decisions about acceptable levels of resource use and resource change. A monitoring system is needed for indicators to provide "the feedback necessary to determine if change is occurring and what kind of change it is" (p. 13). Similarly, Buckley (1999) suggested "a reliable and well-designed environmental monitoring

program is needed, both to establish the LAC parameters, and to determine when they are being approached or exceeded," (p. 707).

Other models of tourism development are manifested in the literature particularly for monitoring the sustainability of tourism. Walker, Greiner, McDonald, and Lyne (1999) developed the systems-thinking based Tourism Futures Simulator (TFS) to evaluate the impacts of nature tourism. The simulator was designed to map the social, economic, and environmental outcomes of certain tourism development scenarios. Walker et al. used Butler's Life Cycle model (1980) and Gunn's model of regional tourism development (1994), which were based on concepts of product life cycle and supply and demand among markets as a foundation. Specifically, "a multi-market-segment regional life cycle model forms the foundation of the TFS" (62). Using tourism to the Great Barrier Reef in their case study, the authors conducted workshops to identify stakeholder groups and collect data on their understanding of the impacts of tourism (e.g. visitor numbers) on the destination. This information was then used to develop conceptual models of the linkages between the members of the tourism system. This information was used to simulate changes in the system that impacted visitor numbers as well as to see how changes in visitor numbers would change members of the system.

Using a dynamic modeling framework, Patterson, Gulden, Cousins, and Kraev (2004) developed an accounting system for tracking the interactions of different elements of the tourism system. The authors used STELLA modeling software and divided the tourism system into its economic, social, and environmental segments. Using both secondary quantitative data and qualitative data based on theory found in the literature, Patterson et al.

created a model of tourism in Dominica and its impacts on all other sectors of Dominican society and economy.

In the process of developing a procedure to assess tourism sustainability, Ko (2005) conducted a literature review to determine the state of sustainability assessment in the literature. Unsatisfied with the result, Ko presented a model for sustainability assessment using the Barometer of Tourism Sustainability and the AMOEBA of tourism sustainability indicators. AMOEBA (a Dutch acronym for "a general method of ecosystem description & assessment) was first developed by Ten Brink et al. in 1991 to study river ecosystems. These approaches when combined assess the current sustainability of a tourism destination as well as the stability of individual tourism indicators. Ko supported the idea of a combined holistic and reductionist approach to the evaluation of sustainable tourism in theory, but in practice used quantitative methodology consistent with a reductionist approach.

Johnston and Tyrrell (2005) used a dynamic modeling framework to examine sustainable tourism. Specifically, the authors developed "a theoretical dynamic optimization model" for "a region seeking to maximize sustainable benefits from tourism" (p. 125). The model was used to examine the notions of sustainable tourism based on the tourism industry and the permanent residents of a tourism destination. The model was based on the optimal control theory used in fisheries. Instead of selecting one community dependent on tourism, the authors used a theoretical community to simplify model building and assumptions. According to Johnston and Tyrrell, the richness of factors present in the tourism industry required that their model be abstracted, "the model is kept simple to maintain a focus on the primary dynamics of interest and their implications for tourism" (p. 126). The authors made a number of assumptions to create the model. Johnston and Tyrrell assumed that the

environmental quality of a destination renews itself and that visitors were attracted to high levels of environmental quality, but also created the source of environmental degradation. An assumption was made that the goal of the tourism industry is to maximize the sum of discounted profits (they value immediate profits more than future possible profits) and that residents will maximize their well being based on the economic viability of their community, their interactions with tourists, and environmental quality. Model simulations resulted in two primary conclusions. The first was that there were multiple environmentally sustainable outcomes. Second, policies that emphasized environmental quality above any other factor may be equally as unsustainable as a model that emphasizes profit maximization (Johnston & Tyrrell).

Although each of these models address the issues attempted in this dissertation, issues remained open. Unlike carrying capacity, the current research does not assume one magic number as a ruler for measuring progress toward sustainability. Similar to the LAC framework, my values the perceptions of stakeholders in highlighting factors important to sustainability. However, a step is taken beyond the LAC framework to examine the factors in a community that may be important to sustainability but not immediately visible to stakeholders. Inherent in the conceptual framework developed in this dissertation is a way to monitor current conditions in a destination, a step in the LAC system that is often left unfulfilled.

This dissertation addresses many of the same questions raised by those studies using computer and econometric models. Issues of monitoring a number of indicators from the economic, social, and environmental arenas are common to all studies. Rather than attempt to create a model with specific "parts" that attempt to generalize to a gamut of destinations,

the model used for this dissertation was constructed based on the following assumptions. The concept of sustainability in one destination may not be generalizable to another. The factors that constitute the sustainability of a destination will instead be context-specific and what can be provided is a tool through which those factors can be examined.

The Plimsoll Model of Tourism Sustainability

Background

The Plimsoll Model is based on a concept imported to a conversation of sustainability by Daly (1996). The Plimsoll Line is a mark on the hull of a ship that indicates the optimal loading of cargo. The line was the result of the amended Merchant Shipping Act of 1876. From the mid 1800s until the passing of the act, the British public was generally concerned that too many merchant sailors were dying at sea because the boats were overloaded with cargo. In 1870, Samuel Plimsoll began a campaign to require merchant ships to bear a line of optimal loading (Figure 2.2). Opposition from the shipping industry and their allies in Parliament kept the amendment from passing until 1876 (Victorianweb, 2002). The Plimsoll line is also known as the International Load Line.

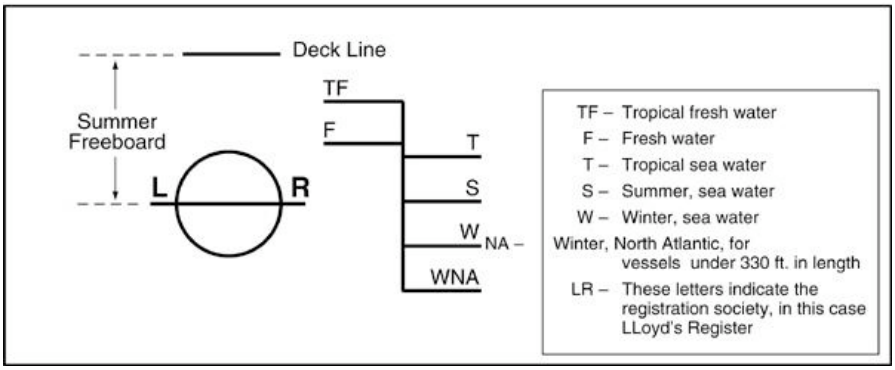

Figure 2.2: The Plimsoll Line
Note: From *Military Geography for Professionals and the Public. Accessed from http://www.ndu.edu/inss/books* Books%20%201998/Military%20Geography%20 March%2098/milgeoch4.html

Plimsoll Model Development

When the model was initially conceptualized for a tourism system application, the ship and its cargo represented the tourist destination was loaded with the three pillars of sustainability (see figure 2.3). Attractions, government and administration, information resources, residents, visitors, services, transportation, and the natural and built environments fell into either an ecological, social, or environmental category. The cargo was placed in containers and these containers had no real lines of connection between them aside from being in the same boat. This arrangement contradicted the point of conceptualizing destinations as systems. When efforts were made to connect the containers, a conceptual roadblock was reached. This conceptual model failed to explain how indicators were contextual to the destination but also that they had connections with each other. The conceptual lines drawn around the pillars of sustainable development were not neat simple lines. They were multidimensional and complex.

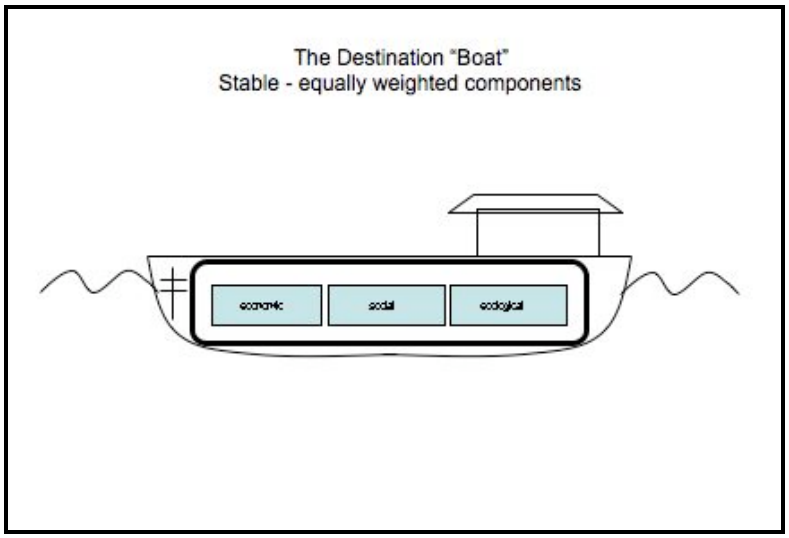

Figure 2.3: The Destination Boat, Equally Weighted Components

One way to reconceptualize how the containers fit in the boat is the Driving force-State-Response framework (DSR) based on the Pressure-State-Response (PSR) framework (see Figure 2.4). The PSR framework was developed by the Organization for Economic Cooperation and Development (OECD, 1997) to monitor and understand the relationships between development and environmental impacts. The development of an environmental monitoring system by the OECD was originally mandated as part of an agreement between G-7 summit member countries and the OECD. The OECD Council Recommendation on Environmental Indicators and Information recommended that indicators be developed to monitor environmental performance and better inform both environmental and economic decision-making (OECD, 1997). When the DSR framework was developed, a broader conceptualization of an environmental-economic system was needed. Where the term *pressure* was associated with negative environmental impacts of development, *driving force* connoted both the positive and negative impacts on social and environmental aspects of development (Mortensen, 1997; Mannis, 2002).

The terms driving force, state, and response are defined as:

> Driving force indicators: driving force indicators are those human activities, processes and patterns that have an impact on sustainable development. They "have an indication of the causes of positive and/or negative impacts in the state of sustainable development" (p. 3).
>
> State indicators: state-level indicators indicate the 'state' of development or a particular aspect of it at a given point in time. Indicators can be qualitative or quantitative.

Response indicators: indicate policy options and other responses to changes in state level indicators (Mortensen, 1997).

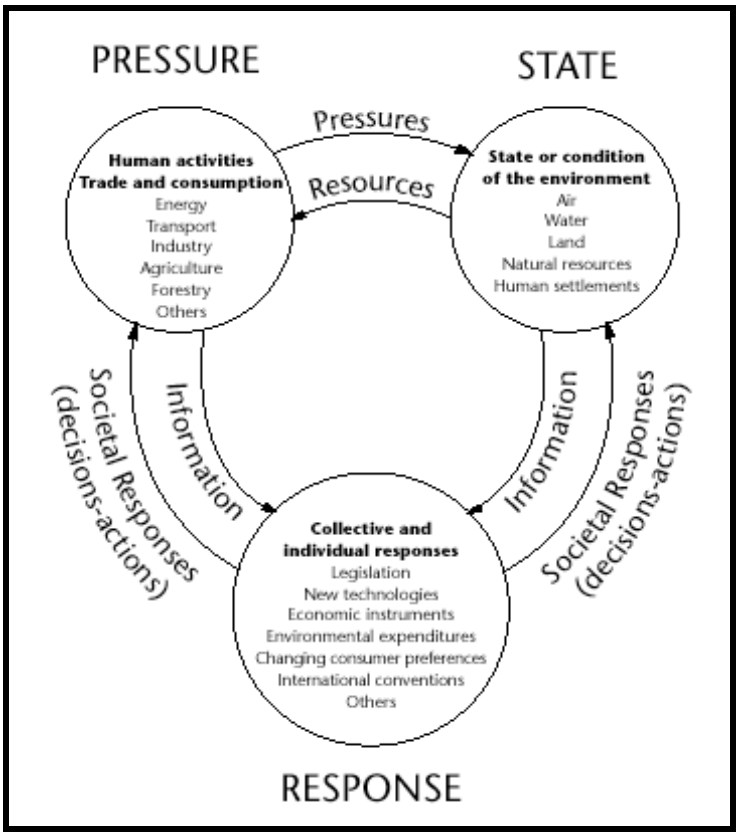

Figure 2.4 OECD Pressure-State-Response Framework
Note: From *Pressure-State-Response Framework: Basic components.* http://www.virtualcentre.org/en/dec/toolbox/Refer/psrbasic.htm

Originally, the components of a sustainable tourism destination were placed according to their relevance as indicators of economic, environmental, or social sustainability (see Figure 2.3, p. 49). The placement of components in the boat was done to achieve optimal distribution and stability. In their application of the systems hierarchy principle to rural economic analysis, Midmore and Widittaker (2000) postulated that the stability of the system "refers to the ability of entities to maintain self-organization while evolving" (p. 179). Although the boat may rock and adjustments may be made to the distribution of the cargo

(i.e. through policy changes, market forces, and normative rules), an optimally loaded boat will not capsize (Figures 2.5 and 2.6).

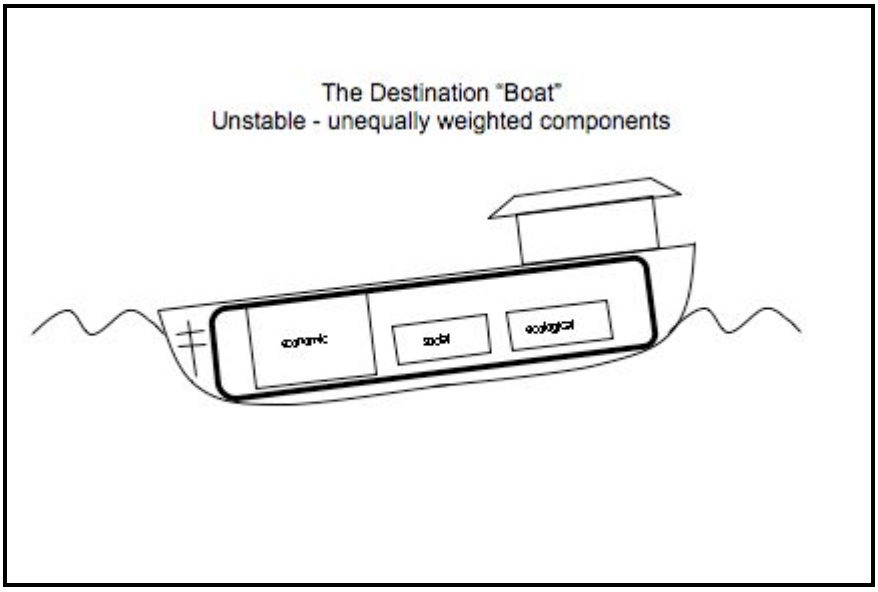

Figure 2.5 The Destination Boat, Unequally Weighted Components

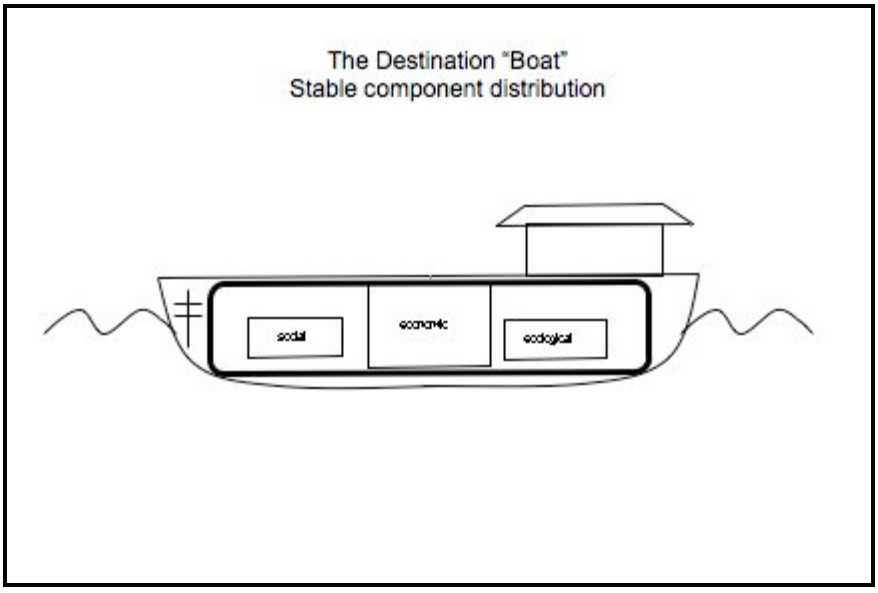

Figure 2.6 The Destination Boat, Stable Component Distribution

This conceptualization of the tourism destination as a ship with the economic, social and environmental cargo in the hold with little if no interaction as a system also limited how I thought about sustainability. Without an understanding of the potential interactions between the economic, social, and environmental factors, knowing when an optimal load had been reached was difficult. Sustainability research has not yet answered the question "what is sustainable?"

Therefore, the model was changed to provide a more accurate description of the predicted interaction of sustainability indicators. Instead of the economic, social, and environmental components of a destination being limited to cargo boxes without interconnectivity, the components became the driving force to move the boat forward: they were the fuel, the pilot, and the cargo (Figure 2.7). An environmental component can be a driving force, state, or response indicator. Instead of trying to measure progress toward sustainability which is a lofty goal when an endpoint is unknown, the model measured how the factors (the components) are loaded in relationship to each other.

According to the DSR framework, a component of a tourism destination indicates sustainability according to whether or not the component is a driving force of sustainability, an indicator of the state of development, or a response to the indicators of the state of development or the driving forces of sustainability. The components of the boat will invariably differ from destination to destination. This differentiation is necessary to maintain the inherently contextual nature of the approach. However, a list of potentially applicable components is possible. The WTO provided a general set of Core/Baseline Indicators for sustainable development (1995, 2004). These indicators highlight what the WTO

hypothesized as the most important indicators for the sustainability of a destination (See Appendix A).

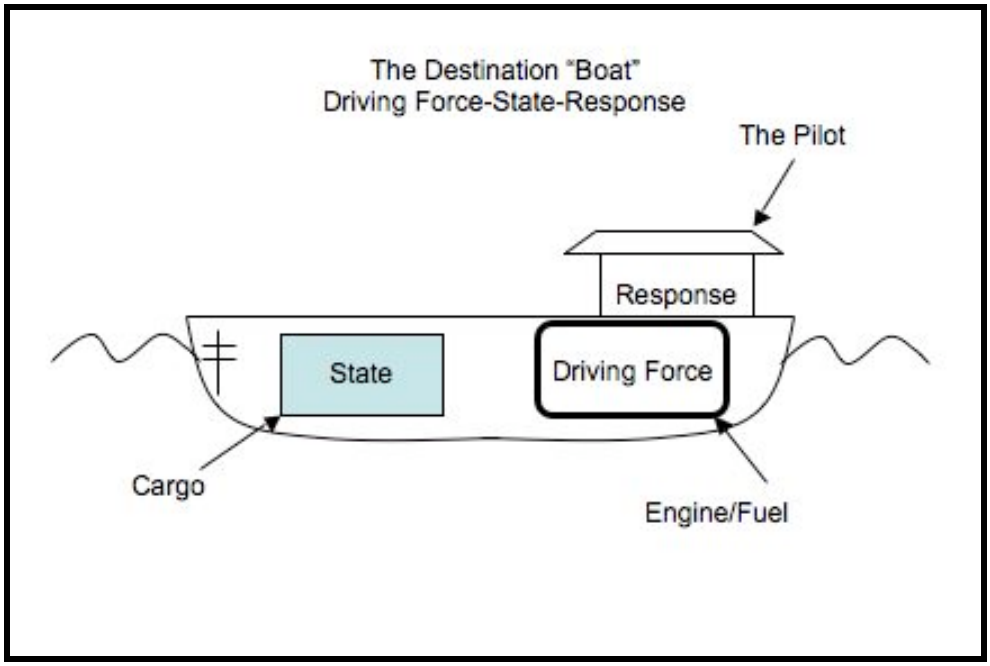

Figure 2.7 Reconceptualized Destination Boat – Driving Force-State-Response Plimsoll Model

The WTO also outlines a set of indicators that are more context-dependent. For example, indicators for coastal destinations vary widely from those relevant to alpine communities. Extending the metaphor further, a destination "loaded" for a "tropical salt water" trip will be unstable if it ventures into "winter north Atlantic" waters. An important consideration is that a boat can be "optimally" loaded, but not on an infinite scale. Eventually, despite efforts to optimize, infinite loading will sink the boat.

The Plimsoll line/DSR framework differs from those approaches to modeling tourism systems outlined previously in a critical manner. Carlsen (1998), Gunn (1994), and Sessa (1988) provided models of the structure of the tourism industry and how it develops using a

system, but the Plimsoll line model provides a concept of the tourism system that sets it not only in the context of the overall sustainability of a destination, but it brings with it a concept of adaptability. It also looks at how indicators are related to each other within the tourism system.

Sustainable development and sustainable tourism development arose out of a need to reconcile the environmental and social impacts of previously uninhibited economic growth. Many approaches have accepted the challenge to create a framework for sustainable development. Most of these approaches have focused on the ecological or economic aspects of sustainability. Few approaches have integrated the two elements. Many have pitted aspects against each other (Cooper & Vargas, 2004). The focus on ecological and economic system sustainability is symptomatic of similarities in the processes of consumption and production (Limburg, O'Neill, Costanza, & Farber, 2002). A third element of sustainability, the social element, has received less attention in both general sustainable development and sustainable tourism development literature. The social element is important, however, because a society's values are often indicative of what is valued and why, which will inform what should be sustained. In other words, a society will have a lot to say about how big the boat should be given the resource constraints dictated by the environmental elements. Buckley (2003) introduced the idea of the "Triple Bottom Line" (3BL) in his evaluation of ecotourism for the World Ecotourism Summit in 2002 to evaluate economic, environmental *and* social concerns in ecotourism destinations. The 3BL approach to evaluating ecotourism was an idea coined by Elkington in 1994 as a way for businesses to account for their efforts toward sustainable development (Elkington, 2004). As an accountability tool, the triple bottom line suggests economic, social, and environmental costs and benefits should be

accounted for separately. Under this regimen of corporate responsibility, a company does not receive recognition for its efforts unless all three bottom lines are positive. Ecotourism destinations or eco-tour businesses would not receive recognition as such for similar reasons, according to Buckley (2003). The underlying theme of the 3BL approach, however, suggests at mode of measure that accounts for the social, environmental and economic sectors of a tourism destination separately. The 3BL approach demands accountability to achieve and suggests progress toward sustainability because a business is forced to consider the economic, environmental and social revenues and costs of doing business. Sustainability, according to Buckley, is not necessarily the result of such an approach, but the system of accountability created by the 3BL is a step toward long-term success.

The 3BL approach stresses the fact that the economic, social, and environmental costs and benefits of ecotourism can be compatible, for example, reducing expenditures on laundry services in hotels by asking occupants to reuse their towels and subsequently reducing effluent discharge and water use (Buckley, 2003). However, the accounting system proposed with the 3BL is not integrative and thus the interrelationships between the social, environmental, and economic systems are not an explicit component of the framework. Therefore, a conceptual framework is necessary to addresses this third element and to unite the three environmental, economic, and social elements into a sustainable system of tourism development.

The purpose of this research is to develop a conceptual framework for a tourism system in the context of sustainable development. The proposed framework, the Plimsoll line/DSR, incorporates three aspects of sustainable development that have been problematic in the past. Specifically, sustainable development is approached as a concept with

contextual, rather than general characteristics. Rather than approaching sustainable development in an fashion that considers the economic, social, and environmental components of a destination separately, they are approached holistically. In order to operationalize the relationship between the economic, social, and environmental components of a destination, the baseline indicators of sustainability, as suggested by the World Tourism Organization, are taken from a generalized situation to a realistic one (i.e. Tyrrell County) using the Plimsoll Model of sustainable development. General Systems Theory is incorporated into the conversation of the tourism product in a destination with aspirations of sustainable development.

CHAPTER 3

METHODS

The purpose of this study was to develop a conceptual framework for sustainable development in tourism destinations that addressed (a) the apparent lack of theoretical framework for sustainable development (b) the integration of social, economic, and ecological elements of sustainable development; and (c) the contextual nature of sustainable development. This chapter provides an in-depth description of the model developed to examine these relationships, the data necessary to measure them, the sources of those data, and the methods used to test the proposed relationships.

The theoretical framework used in this study was General Systems Theory (GST) which provided a framework through which the elements of the tourism system were examined in a holistic manner. The conceptual framework proposed is a concept borrowed from shipping: the Plimsoll line. A concept originally applied to sustainability by Daly (1996), the Plimsoll line is a demarcation on the hull of a ship that acts as an optimal loading indicator. To understand the interrelationships between the elements of a tourism destination, the driving force-state-response framework was used. Allegorically, the "ship" in this case is the tourism destination, its cargo were those elements in a tourism destination that indicated the state of the destination, the engine and fuel were the driving forces of development, and the pilot of the ship represented those actions (either through policy or natural reaction) that responded to the driving forces of development.

The research presented in this dissertation is a model of the relationships between the elements of a destination using structural equation modeling. This method of analysis allows researchers to understand where important relationships exist and which theorized

relationships do not. Following closely the contextual nature of sustainable development, as well as the practical concern of data availability, data for this model were acquired based on the indicators relevant and identified in the sustainable tourism literature to the destination.

This chapter is divided into the following sections: (a) research setting, (b) model description, (c) data, and (d) analysis method.

Research Setting

Tyrrell County, North Carolina is located in the eastern part of the state (Figure D.1, Appendix B). A number of tourist attractions exist within the county's borders, though the county is ranked 98th out of 100 counties for tourism expenditures (North Carolina Department of Commerce, 2005). The county is bordered by the Albemarle Sound to the North and the Alligator River to the East. Columbia is the county seat and is located on the banks of the Scuppernong River. Out of North Carolina's 100 counties, Tyrrell ranks 100th in population, unemployment, and is ranked as a Tier 1 county, meaning it is among the poorest in the state. Nearly 90% of the 260,000 acres of the land in the county is considered "unbuildable," (Hopkins, 2005, p. 121). The county is also characterized by high property taxes, ranking as one of the highest in the state at $1.01/$100 in property value. In addition to this situation is more than 35% of land acreage in the county that is not part of the tax base because it is owned by federal and state wildlife refuges and private or non-profit and religious organizations.

The county holds many opportunities for cultural, historical, and natural resource-based tourism. Tyrrell County has a rich history dating back to the Secota Indians and European settlers. The natural resources in the county are numerous and include the Pocosin Lakes National Wildlife Refuge, the Palmetto-Peartree Preserve, and the Emily and Richard

Preyer-Buckridge Coastal Preserve. In 2004, the economic impact of domestic tourism to the county was $3.16 million and approximately 20 jobs were directly attributable to travel and tourism (North Carolina Division of Tourism, 2004). This county is not known for significant tourism resources and must compete with neighbors like Dare County also known as the North Carolina "Outer Banks." Dare County houses considerably more tourism potential than Tyrrell County. The main route to the Outer Banks is through Columbia on NC Highway 64 and therein lies the added challenge to tourism development in the county: getting people to stop on their way out to the Outer Banks, and maybe even stay. Dare County, ranked fourth in tourism expenditures, is a draw because of its expanses of beaches, resorts, and rental properties, Cape Hatteras National Seashore, the Wright Brother's Memorial and the Lost Colony on Roanoke Island as well as access to some of North Carolina's most famous lighthouse landmarks. Although the two counties are comparable in size, their likenesses stop there (Table 3.1, p. 60).

Although tourism is not considered a major industry in Tyrrell County, significant steps have been taken by county leadership to plan for its development in a sustainable way. The Tyrrell County Coastal Initiative Committee, formed in conjunction with a grant from the governor, created the Vision 2000 plan for the county in an effort to promote the county's cultural and natural resources. In 1989, the committee partnered with The Conservation Fund's Resourceful Communities Program to bring Vision 2000 to fruition. The Pocosin Lakes National Wildlife Refuge and the Partnership for the Sounds were the first elements of Tyrrell County's development plan were quickly followed by the construction of the rest area, visitor center, and the Walter B. Jones Center for the Sounds. These facilities, located off of Highway 64 in Columbia on the banks of the Scuppernong River, provide a stopping-

point for visitors on their way to the Outer Banks . The visitors center has become one of the most visited facilities in North Carolina, and anecdotal reports note an increase in visitation to main street vendors in downtown Columbia (Hopkins, 2005, p. 131).

Table 3.1 Demographic and economic comparison of Tyrrell County, NC, Dare County, NC, and North Carolina.

	Tyrrell County	Dare County	North Carolina
Population Information			
Population (2005)	4,180 [a]	35,145[b]	8,049,313 (2000 est)[c]
Population change since 1990	7.8%[a]	35.3%[b]	21.4%[a]
% Born in NC	77.1%[c]	34.7%[d]	63.0%[c]
Median Income	$25,684[c]	$42,414[d]	$39,184[c]
Poverty Rate	23.3%[c]	8%[d]	12.3%[c]
Property Tax Rate	$1.01[c]	$0.54[d]	
Crime Rate (percent per capita)	17.8%[c]	52.9%[d]	45.6%[c]
Agriculture Information			
Number of Farms	91[e]	8[f]	50,000[g]
Avg. Farm Size	809 acres[e]		178[g]
Cash Receipts from Agriculture	$25.6 million[e]	$420,000[f]	$7,273,892,000[g]
Geographic Information			
Total county area (acres)	249,555[e]	244,269[f]	53,821 square miles[g]

a North Carolina Department of Commerce (2005) Tyrrell County Profile. Accessed 4/3/2006, http://cmedis.commerce.state.nc.us/countyprofiles/files/pdf/Tyrrell_2005Q4.pdf

b North Carolina Department of Commerce (2005) Dare County Profile. Accessed 4/3/2006, http://cmedis.commerce.state.nc.us/countyprofiles/files/pdf/Dare_2005Q4.pdf

c North Carolina Rural Center (2005) County profile for Tyrrell County. Accessed 4/3/2006, http://www.ncruralcenter.org/databank/profile.asp?county=Tyrrell.

d North Carolina Rural Center (2005) County profile for Dare County. Accessed 4/3/2006, http://www.ncruralcenter.org/databank/profile.asp?county=Dare

e North Carolina Department of Agriculture & Consumer Services (2005) Tyrrell County statistics. Accessed 4/3/2006, http://www.ncagr.com/stats/cntysumm/tyrrell.htm

f North Carolina Department of Agriculture & Consumer Services (2005) Dare County statistics. Accessed 4/3/2006, http://www.ncagr.com/stats/cntysumm/dare.htm

g National Agriculture Statistics Service (2005) North Carolina Data – Farm Statistics. Accessed 4/3/2006, http://www.nass.usda.gov:8080/QuickStats/PullData_US

As part of the planning process for the Palmetto-Peartree Preserve in the northeastern part of the county, the Tyrrell County Ecotourism Committee (TCEC) was created. As a subcommittee of the Tyrrell County Tourism Authority, the TCEC is an advisory body that works "to promote and protect the county's vast natural resources through tourism, in a manner that benefits the local economy and pays tribute to the region's rich cultural heritage" (Tyrrell County Chamber of Commerce, 2005). Members of the TCEC include local business owners, county government representatives, representatives from national and state parks and wildlife refuges, and non-profit organizations.

According to a study by Lash and Black (2005), residents in Tyrrell County are interested in economic growth, as well as environmental protection and preservation of their rural way of life. Out-migration of area youth is a considerable problem for rural counties in North Carolina and economic growth in rural communities is seen as a way to keep this population close to home.

Model Description

As stated previously, the Plimsoll Model is based on a concept introduced to the sustainability discussion by Daly (1996). The Plimsoll line is a gauge located on the hull of the ship designed to indicate optimal loading. The term Plimsoll "line" is somewhat misleading because there are actually several lines indicating optimal loading, depending on several variables: whether or not the ship is in fresh or salt water and whether it sails in summer or winter. In a tourism context, the ship represents the components used to describe a destination. Broadly defined, these components generally fit into the social, economic, and ecological categories referred to previously. They are the ship's pilot, cargo, and fuel/engine.

The components of a tourism destination relevant to this discussion are those outlined by the WTO as important indicators of a destination.

Loading each of these components in the boat so an optimal distribution is achieved will indicate system stability. That is, the loading of these components (i.e., their level of importance in the model) will indicate the level of balance (or lack of) in the system (Figure 2.7, p. 52).

There are methodological problems associated with measuring sustainability. As with carrying capacity, the sustainability of tourism is inherently subjective – there is no definitive way of knowing whether an action or policy will be sustainable into the future. Concepts of sustainability depend on the ideologies of decision-makers and stakeholders, and are hopefully informed by indicators. Similarly, "there are no definitive guidelines available to inform destinations as to which ones are most important," (Weaver and Lawton, 1999, p. 7). However, there are an abundance of "candidate indicators" for sustainable tourism. For example, the World Tourism Organization has identified Core Indicators of Sustainable Tourism (1995), a list that was followed up by an expanded, extensive index of possible indicators of sustainability for a variety of different destinations (see WTO, 2005).

Weaver and Lawton (1999) provide a list of candidate indicators of sustainability, but claim that this list "is not definitive, but rather intended to serve as an inventory which can be expanded or contracted as the knowledge base on sustainability and relevant indicators continue to evolve" (p. 21). The number of potential indicators for the sustainability of a destination can be very large and, according to Weaver and Lawton (1999) require classification according to a system of categories. These categories are scale (geographic), association with tourism, level of aggregation, sector, and function (Table 3.2, p. 64).

For the purposes of this study, the indicators used will be at a local and site-specific scale (when possible), have both product- and market-related associations with tourism, have both individual and composite levels of aggregation, and include the environmental, social, and ecological sectors. The Weaver and Lawton (1999) model addresses the issue of what function an indicator plays in indicating the sustainability of a tourism system. They divide these indicators into six categories, which are loosely based on the Pressure-State-Response/Driving Force-State-Response network developed by the Organization for Economic Cooperation and Development (1997).

Table 3.2 Sustainable tourism indicator categories

Sustainable Tourism Indicator Categories	Level
Scale	International National Sub-national Local Site-specific
Association with tourism	Product-related Market-related
Level of aggregation	Individual Composite
Sector	Environmental Economic Social Cultural
Function	Warning Pressure or stress Status Impacts/Consequences Management action Management impact.

Note: From *Sustainable tourism: A critical analysis*. Research report 1 (1999). by Weaver & Lawton. Queensland, AU: Griffith University

Data

Data Sources

To determine which data to collect and from which recommended sources, the WTO's *Indicators of Sustainable Development for Tourism Destinations* (2004) served as a primary reference. The WTO in 1997 developed a "first draft" of core indicators for sustainable tourism development. The WTO's Environment Committee formed a Tourism and Environment Task Force to construct a list of national level indicators as well as a potential list of destination specific indicators. They tested these lists in four case studies in 1993 and the indicators were published in *What tourism managers need to know: a practical guide to the development and use of indicators of sustainable tourism* (WTO, 1997). The core indicators (Table 3.3) were meant for general application in all tourism destinations while the destination specific indicators were developed to be applicable to destination types or ecosystems (WTO, 1997).

In 2004, a comprehensive list of recommended indicators was published (Table 3.3, p. 64). The core indicators outlined in the 1996 document remain and were broadened to include and are accompanied by additional indicators as well as destination-type specific indicators (for example, coastal versus alpine destinations) as demonstrated in Table 3.4 (p. 66).

Table 3.3 WTO 1995 Core Indicators of Sustainable Tourism

Core Indicator	Specific Measure
Site protection	Category of site protection according to the International Union for the Conservation of Nature and Natural Resources (IUCN) index
Stress	Tourist numbers visiting site (per annum/peak month
Use Intensity	Intensity of use in peak period (persons/acre)
Social impact	Ratio of tourists to locals (peak period and over time)
Development control	Existence of environmental review procedure or formal controls over development of site and use densities
Waste management	Percentage of sewage from site receiving treatment (additional indicators may include capacity on site, such as water supply)
Planning process	Existence of organized regional plan for tourist destination region (including tourism component)
Critical ecosystems	Number of rare/endangered species
Consumer satisfaction	Level of satisfaction by visitors (questionnaire-based)
Local satisfaction	Level of satisfaction by locals (questionnaire based)
Tourist contribution to local economy	Proportion of total economic activity generated by tourism only

Note: From *What tourism managers need to know: a practical guide to the development and use of indicators of sustainable tourism.* World Tourism Organization (1996). Madrid, Spain

Table 3.4: WTO 2004 Baseline Issues and Indicators

Core/Baseline Issue	Suggested Baseline Indicators
Local satisfaction with tourism	Local satisfaction level with tourism (obtained with questionnaire).
Effects of tourism on communities	- Ratio of tourists to locals - % of residents who believe that tourism has helped bring new services or infrastructure - Number & capacity of social services available to the community.
Sustaining tourist satisfaction	- Level of satisfaction by visitors (obtained with questionnaire) - Perception of value for money (obtained with questionnaire) - Percentage of return visitors
Tourism seasonality	- Tourist arrivals by month or quarter (distribution throughout the year) - Occupancy rates for licensed (official) accommodation by month - % of business establishments open all year - Number and % of tourist industry jobs which are permanent or full-year (compared to temporary jobs).
Economic benefits of tourism	- Number of local people (and ratio of men to women) employed in tourism. - Ratio of tourism employment to total employment. - Revenues generated by tourism as % of total revenues generated in the community
Energy management	- Per capita consumption of energy from all sources - % of businesses participating in energy conservation programs, or applying energy saving policy and techniques - % of energy consumption from renewable resources

Table 3.4 Continued

Core/Baseline Issue	Suggested Baseline Indicators
Water availability and conservation	- Water use (total volume and liters per tourist per day) - Water saving (% reduced, recaptured, recycled)
Drinking water quality	- % of tourism establishments with water treated to international potable standards
Sewage treatment (wastewater management)	- % of tourism establishments on treatment systems - % of sewage from site receiving treatment
Solid waste management (garbage)	- Waste volume produced by the destination - Volume of waste recycled/total volume of waste - Quantity of waste strewn in public areas
Development control	- Existence of a land use or development planning process, including tourism - % of area subject to control (density, design, etc).
Controlling use intensity	- Total number of tourist arrivals (mean, monthly, peak periods) - Tourist density

Note: From *Indicators of sustainable development for tourism destinations: A guidebook*. World Tourism Organization (2004) Madrid, Spain.

As outlined previously, an important component of determining relevant sustainability indicators is the involvement of host community members in the decision-making process. Both the preliminary and theoretical nature of this study as well as the infancy of the tourism industry in Tyrrell County led me to consult outside sources of recommendations of sustainability indicators for destination environments similar to Tyrrell County. In the next iteration of the study, a more comprehensive examination of host community perceptions of proper sustainability indicators will be conducted. For this study, the WTO's extensive enumeration of sustainability indicators were considered a Delphi-type

recommendation for important indicators to include in an analysis. A complete list of the WTO's recommended sustainability indicators is provided in Appendix A.

Data Acquisition.

Data for this study were obtained and derived from secondary sources from 1980 to 2003. The primary source of the data was the Log Into North Carolina (LINC) service. LINC is a service provided by the North Carolina Office of State Budget and Management and acts as an interactive web portal of historic data from both state and federal agencies. LINC facilitates access to data from the U.S. Census Bureau, the Bureau of Economic Analysis, the North Carolina Department of Commerce, and the North Carolina State Department of Transportation to name a few. Traffic count data were derived from average daily traffic count maps provided by the North Carolina Department of Transportation. Geographic information was derived from data provided by the National Atlas. Water quality data were available through the Environmental Protection Agency's STORET service. Appendix D provides a detailed accounting for all data sources.

Imputing Missing Data

The SPSS "replace missing values" procedure was used to estimate the remaining missing values using the "linear trend at point" method. This method replaces a missing value with the linear trend for that point. The series is regressed on an index variable scaled from 1 to n. Missing values are then replaced with their predicted values (SPSS Inc, 2005).

According to Boomsma (1983), Ullman (2001), and Garson (2006), a reasonable sample size for structural equation modeling is ≥ 200. Two-hundred years of data, however, is not available for Tyrrell County, especially regarding tourism development and environmental policy. Therefore, this analysis worked primarily with two sets of data. The

first dataset was based on data available between the years 1980 and 2003. The imputation method described above was used to estimate missing values for that time period. The second set of data was generated for the selected indicators and imputed over 250 years (1980 to 2230) using the "linear trend at point" method to test the stability of the model. The second set of data also provided some insight into how the relationships between indicator variables change according to amount of data available and into the long-term sustainability of Tyrrell County if the status quo is maintained in its rate of economic development, population growth, and resource use.

Certain variables were assumed to be relevant to the model. However, no data were available for the analysis time period. For example, tonnage of volatile organic compounds (n_VOC) and nitrogen oxide (n_NOX) as well as water use by self-supplied industry (n_watind) and water use for thermoelectric power generation (n_wattherm) were not available and therefore not included in the modeling.

Derived Data

Analysis required the researcher to derive variables necessary to the model (e.g., ratios and percentages) because of a lack of specific measures for some variables. For example, data for unemployment ratios (i.e., the number of unemployed people per total workforce) in Tyrrell Counyt was unavailable, but the number of unemployed persons per year and the number of individuals in the work force (unemployed or not) was. Table 3.5 outlines the specific variables as well as the method used in their derivation.

Table 3.5 Variables derived from other variables in the dataset

Variable	Variable Description	Derivation Method	Source
Air Pollution Score	The total carbon dioxides, and sulfur oxides in tons.	Additive formula of compounds (included imputed values)	North Carolina Division of Air Quality, LINC
Unemployment ratio	The ratio of unemployed residents of Tyrrell County to the total labor force of Tyrrell County.	Number of unemployed individuals divided by the number of individuals in the labor force	LINC, North Carolina Department of Commerce Annual Labor Force and Employment report.
Average tourism income	The average income made by individuals employed in the tourism industry	Annual total income of tourism industry employees/employment in the tourism industry	LINC, North Carolina Department of Commerce
Average income	The average income of individuals employed overall	Total annual income/total employed individuals in Tyrrell County	LINC, Bureau of Economic Analysis, North Carolina Department of Commerce Annual Labor Force and Employment Report
Tourism industry income ratio	The ratio of the average income of individuals employed in the tourism industry/the average income of individuals employed overall	Average tourism income/average total income.	LINC, North Carolina of Commerce
Tourism employment ratio	The ratio of employment in the tourism industry to total employment	Employment in the tourism industry/total employment (full and part time)	LINC, North Carolina Department of Commerce

Data Substitutions

The baseline issues and indicators of sustainability recommended by the WTO include several options and sources for data. However, that data is not always available and may require substitution or imputation. In some cases neither the data nor suitable substations were available. Therefore, those indicators were not included in the analysis. For example, there is currently no temporal data of resident perceptions of the tourism industry in Tyrrell County. Alternative indicators are suggested by WTO. For example, if none of the baseline indicators listed for impacts of community life were available, the WTO suggests several alternatives, including estimated net migration and percentage of vernacular architecture preserved. Table 3.6 provides a detailed description of the 12 baseline issues, which indicators are suggested by the WTO, and indicators included in the analysis (17) substitute indicators (5) and indicators unavailable for inclusion in the analysis (18).

Table 3.6 also illustrates if an indicator was used as a driving force, state, or response indicator. This follows the OECD (1997) rationale that an indicator provides insight into sustainability by how it indicates human activity in a system. A driving force indicator is one that has an impact on sustainable development; a state indicator is an indication of the condition of sustainable development at any given point in time; and a response indicator is one that describes policy actions or other responses to the state indicators (Mortensen, 1997).

Table 3.6 WTO baseline issues of sustainability, indicators, and substitute indicators for Tyrrell County

Baseline Issue	Suggested Baseline Indicators	Substitution Indicator	Source	DF-S-R
Local satisfaction with tourism (Wellbeing of host community)	Local satisfaction level with tourism (obtained with questionnaire).	-Unavailable		
Effects of tourism on communities (Wellbeing of host community)	Ratio of tourists to locals	-Unavailable		
	- % of residents who believe that tourism has helped bring new services or infrastructure	-Unavailable		
	- Number & capacity of social services available to the community.	-Average monthly subsidized children in day care.	-LINC; NC Department of Instruction	R
	-Supplemental: community demographics	-Estimated net migration	-LINC; U.S. Census Bureau	DF
	-Supplemental: average distance to work or school	-Substitution: average daily school bus mileage	-LINC; NC Department of Health & Human Services	S
	-Supplemental: housing issues: % of affordable housing for residents.	-Median housing values for owner occupied units	-LINC; U.S. Census Bureau.	DF

Note: DF=driving force, S=state, R=response

Table 3.6 Continued

Baseline Issue	Suggested Baseline Indicators	Substitution Indicator	Source	DF-S-R
Sustaining tourist satisfaction (Tourist satisfaction)	- Level of satisfaction by visitors (obtained with questionnaire)	-Unavailable		
	- Perception of value for money (obtained with questionnaire)	-Unavailable		
	- Percentage of return visitors	-Unavailable		
Tourism seasonality (Capturing economic benefits of tourism)	- Tourist arrivals by month or quarter (distribution throughout the year)	-Unavailable		
	- Occupancy rates for licensed (official) accommodation by month	-Unavailable		
	- % of business establishments open all year	-Unavailable		
	- Number and % of tourist industry jobs which are permanent or full-year (compared to temporary jobs).	-Travel Employment	-LINC; North Carolina Department of Commerce, Division of Travel .	S
Tourism seasonality (Capturing economic benefits of tourism)	Supplemental: short term & seasonal employment	- Unemployment rate for Tyrrell County (recommended indicator)	- LINC; North Carolina Department of Commerce Annual Labor Force and Employment report	DF

Note: DF=driving force, S=state, R=response

Table 3.6 Continued

Baseline Issue	Suggested Baseline Indicators	Substitution Indicator	Source	DF-S-R
Economic benefits of tourism (Capturing economic benefits of tourism)	- Number of local people (and ratio of men to women) employed in tourism.	-Unavailable		
		-Travel employment/Total employment	-LINC; North Carolina Department of Commerce	S
	- Ratio of tourism employment to total employment.	-Travel Pay	LINC; North Carolina Department of Commerce	
		-Expenditures on community services provided by county (utilities, public safety, culture and recreation, economic and physical development, environmental protection, human services)		R
	- Revenues generated by tourism as % of total revenues generated in the community		-LINC; North Carolina Department of the Treasurer	
	- Revenues generated by tourism as % of total revenues generated in the community	-Local tax revenues derived from tourism expenditures	-LINC; North Carolina Department of Commerce	DF
		-Travel expenditures	-LINC; North Carolina Department of Commerce	R

Note: DF=driving force, S=state, R=response

Table 3.6 Continued

Baseline Issue	Suggested Baseline Indicators	Substitution Indicator	Source	DF-S-R
	-Supplemental: Average tourism wage/average wage in community	-average tourism income/average total income.	-LINC; North Carolina Department of Commerce	S
	-Tourism employee income	-Travel payroll	--LINC; North Carolina Department of Commerce	S
Energy management (Managing scarce natural resources)	Per capita consumption of energy from all sources	-Substitute: utility revenues	-LINC; NC Department of the Treasurer	DF
	- Percentage of businesses participating in energy conservation programs, or applying energy saving policy and techniques	-Unavailable -Unavailable		
	- % of energy consumption from renewable resources			
Water availability and conservation (Managing scarce natural resources)	- Water use (total volume and liters per tourist per day)	-Substitution: total water use for Tyrrell County (million gallons/day).	LINC; North Carolina Department of Environment and Natural Resources, Division of Water Resources	DF
	- Water saving (% reduced, recaptured, recycled)	-Unavailable		

Note: DF=driving force, S=state, R=response

Table 3.6 Continued

Baseline Issue	Suggested Baseline Indicators	Substitution Indicator	Source	DF-S-R
Drinking water quality (Managing scarce natural resources)	- Percentage of tourism establishments with water treated to international potable standards	-Substitution: Alligator River Water Quality – Fecal Coliform Bacteria	EPA; STORET	S
Sewage treatment (Limiting environmental impacts of tourism activity)	- Percentage of sewage from site receiving treatment	-Utility Expenditures	EPA; NC Department of the Treasurer	R
	- Percentage of tourism establishments on treatment systems	-Substitution: air quality was also substituted for this indicator because it was an available indicator of "limiting environmental impacts of tourism activity).	-LINC; North Carolina Department of Natural Resources, Division of Air Quality	S
Solid waste management (Limiting environmental impacts of tourism activity)	- Waste volume produced by the destination	-Total solid waste collected.	North Carolina Division of Waste Management	DF
	- Volume of waste recycled/total volume of waste	-Unavailable		
	- Quantity of waste strewn in public areas	-Unavailable		
Development control (Destination planning and control)	- Existence of a land use or development planning process, including tourism	-Unavailable		
	- % of area subject to control (density, design, etc).	-Unavailable		

Note: DF=driving force, S=state, R=response

Table 3.6 Continued

Baseline Issue	Suggested Baseline Indicators	Substitution Indicator	Source	DF-S-R
Controlling use intensity (Controlling tourist activities)	- Total number of tourist arrivals (mean, monthly, peak periods)	-Palmetto-Peartree Preserve, proximal average traffic counts	North Carolina Department of Transportation – GIS & Mapping division	DF
	- Tourist density	-Unavailable		

Note: DF=driving force, S=state, R=response

indicators (Mortensen, 1997). Assignment of the indicators to driving force, state, or response was based on the similarity of the items to those described by Mannis (2002). According to the OECD, "in practice, the distinction between environmental conditions (state) and the pressures (driving force) may be ambiguous" (p. 11). Therefore, the placement of indicators in the driving force or state categories according to the general criteria provided by the OECD was ambiguous and may require modification as more indicators become available.

Analysis Method

The tourism indicator system was modeled using a structural equation modeling methodology (SEM). The use of SEM in tourism, recreation, and sustainability studies varies between model building for support predictors to the development of new uses and methodologies. For example, Yoon, Gursoy, and Chen (2001) used SEM to examine resident support for tourism businesses by testing the structural effects of tourism impacts. Using social exchange theory as their theoretical framework, the authors hypothesize a "direct relationship between residents' perceived total impacts and support of tourism development" (p. 365). Gursoy and Rutherford (2004) recently revisited host attitudes toward

tourism using SEM. Using five impact dimensions (i.e., economic benefits, social benefits, social costs, cultural benefits and cultural costs) they proposed a model that perceptions of these impact dimensions and the perceived state of the local economy by residents are "antecedents of community support for tourism" (p. 497). They found nine determinants of support were important for tourism development. Hyman and Leibowitz (1999) attempted to develop a unified approach to indicator identification using judgment-based SEM. Instead of using SEM to develop formal model solutions, the authors used a SEM framework to formalize "conjectured relationships between variables and to validate these relationships when data becomes available" (p. 211). Williams, Vogt, and Vitterso (1999) explored user responses to wilderness recreation fees using SEM. They hypothesized that because wilderness areas have typically been user-fee free and because the "wildness" of a wilderness experience seems to clash with the idea of a user fee, the response of visitors to user fees needs examination.

Structural equation modeling assists the researcher to identify and understand where important relationships exist and which theorized relationships do not. Where important relationships do exist, for example between transportation and poor air quality, policy can address modes of action to remedy the situation. SEM uses a graphical interface to construct a model of interactions between variables and their indicators. The application of SEM is a two-step process. In the first, the measurement model, which illustrates the link between latent variables and their indicators, is tested using confirmatory factor analysis to determine the strength of the relationships. The second step defines the relationships between the unobserved variables. In the current study, "destination sustainability" is indicated by the weighted relationships of the unobserved Driving-Force, State, and Response indicators.

These are hypothesized by the WTO to be important to understanding the sustainability of a tourism destination and are tested in this dissertation. In a SEM model, ovals represent latent variables, small circles represent measurement error, and rectangles represent measured variables (Figure 3.1).

The structural equation model for the driving force, state, and response indicators of tourism sustainability will therefore be constructed using a number of different data from varying sources. The next step in the modeling process was to test and modify the model for fit and to determine the strength and significance of variable relationships. The hypothesized model was tested using the AMOS 6.0 structural equation modeling software package (Arbuckle, 1999; SPSS Inc, 2005). This is explored at length in chapter 4.

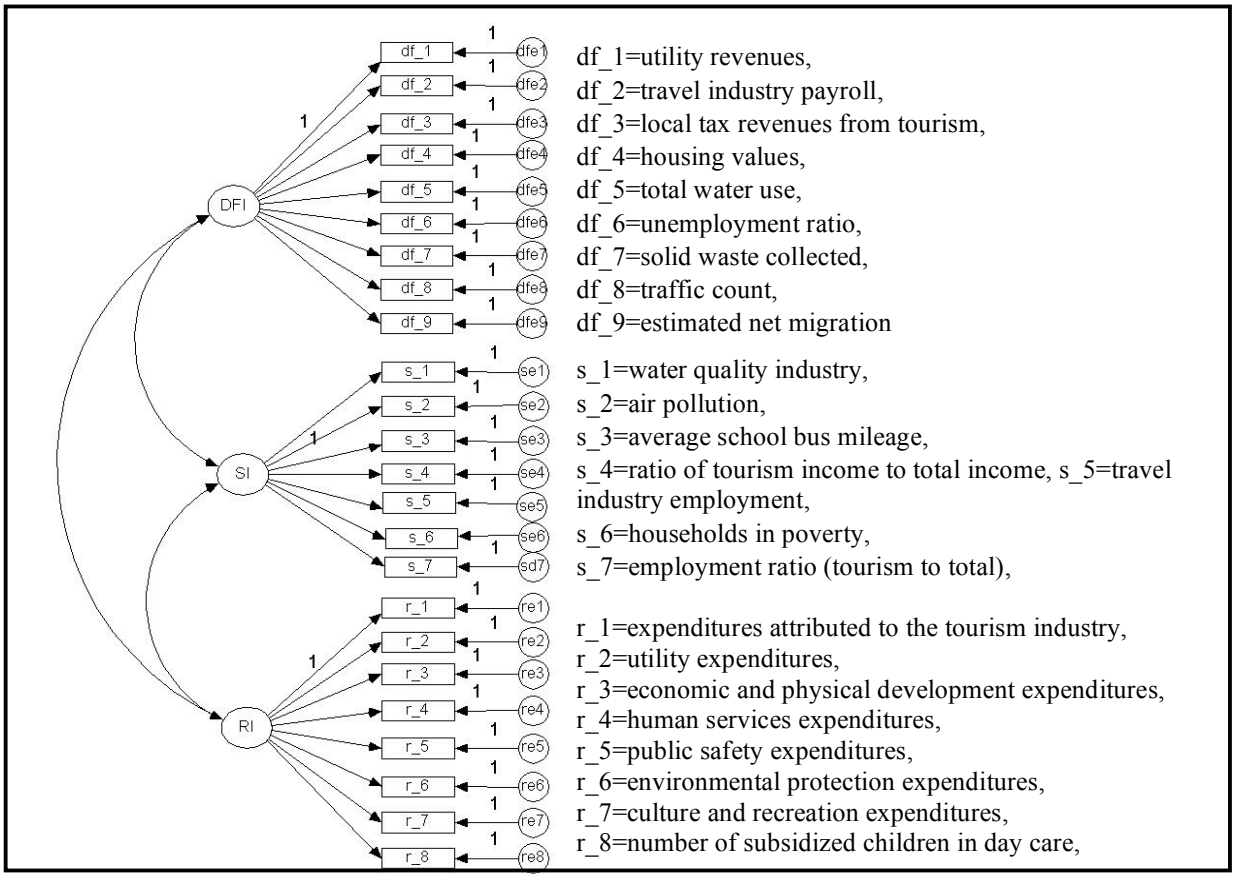

Figure 3.1: The proposed SEM Measurement Model

CHAPTER 4

RESULTS

The purpose of this chapter is to describe the results of the process to integrate the social, economic, and environmental elements of sustainable development using structural equation modeling. The structural model was constructed based on the Plimsoll Model and the DSR framework described previously. This chapter is organized as follows: a brief summary of the data, unidimensionality analysis, confirmatory factor analysis of the measurement model, model assessment, model revision, and confirmatory factor analysis of the structural model.

Data

Data collection for this study was guided by the WTOs expansive list (Appendix A) of recommended indicators of sustainability for tourism development at tourism destinations (2004). As described previously, the WTO commissioned the Tourism and Environment task force to construct a list of indicators for sustainable tourism development. A preliminary list of core indicators was published in 1995. A more complete list of baseline indicators of sustainable development was presented in 2004 and was used as the primary guide for data collection (see Table 3.4 in chapter 3).

The analysis was conducted using the maximum likelihood method of estimation. and followed a seven step process. After determining which baseline indicators to use and collecting the available data for Tyrrell County (step 1 and 2 in Figure 4.1), data analysis followed. First, a unidimensionality analysis was conducted to determine which items provided the most information for the constructs being measured (i.e., the driving force, state, and response variables). Structural equation modeling using AMOS followed. AMOS uses a

two-step modeling process. The first step includes confirmatory factor analysis (CFA) to produce the measurement model, or the statistical relationships between the latent and observed variables. The second step uses CFA again to determine the relationships between the latent (unobserved) variables in a structural model (Figure 4.1). The model is assessed and revised between these steps.

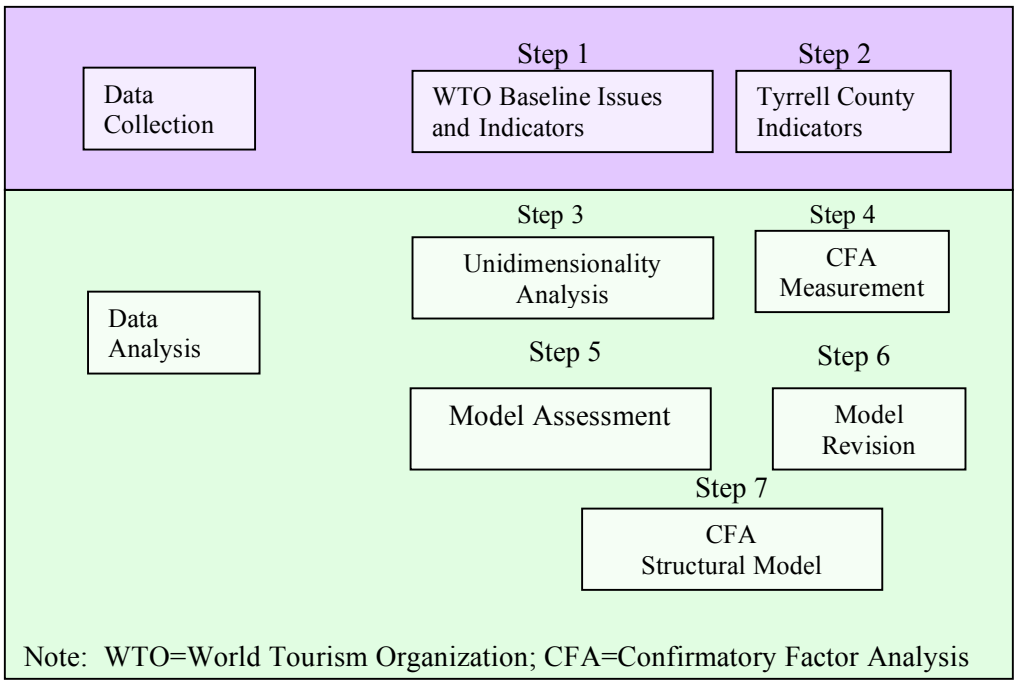

Figure 4.1 Data Collection and Analysis: Steps in the process.

Unidimensionality Analysis

Several tests are available in AMOS to determine how well the theorized model fits the data. The default statistic of model fit in AMOS is the chi-square statistic and its associated *P*-value. However, because the chi-square statistic is sensitive to large samples and can be influenced by violations of a multivariate normality assumption in structural equation modeling, it is recommended that other goodness-of-fit tests are used in conjunction with the chi-square (Gursoy, Jurowski, & Uysal, 2002; and Gursoy & Rutherford, 2004;

Joreskog, 1993; Williams, Vogt, & Vitterso, 1999). These alternatives are comparative fit index (Bentler, 1990), normed-fit index (Bentler & Bonett, 1980), relative-fit index (Bollen, 1986) and the parsimonious fit index (Mulaik et al., 1989). Before the overall measurement model could be tested using CFA, however, it was necessary to assess the unidimensionality of each construct, i.e. driving force, state, and response variables.

Assessment of the unidimensionality of the constructs assures that each set of alternate indicators has only one underlying trait or construct in common (Gursoy, et al., 2002; Sethi & King, 1994). A Cronbach's test of reliability was conducted on the initially proposed items. Table 4.2 presents the results of the reliability test giving the indicator name and correlation for that indicator.

The composite Cronbach's Alpha for each latent variable (driving force, state, and response) are also listed. Table 4.2 provides results for the reliability tests of the sample n=24 years). The indicators with low alpha values of less than .30, as suggested by Joreskog (1993) were removed from the confirmatory factor analysis (CFA) portion of structural equation modeling, excluding unemployment, employment in the travel industry, and the ratio of tourism income to total income because these variables were seen as important representatives of baseline issues, either as substitutes or direct measures of the indicators. This analysis resulted in the deletion of indicators for two items. The number of indicators used to measure the driving force indicator was reduced from nine to seven. The number of indicators used to measure the response indicator was reduced from eight to six.

Table 4.1 Driving Force-State-Response Item Reliability (Cronbach's Alpha)

Constructs and Indicators	Indicator Reliability (n=24)
Driving Force Indicators	0.710*
Travel Industry Payroll	0.930
Local Tax Revenues from Tourism	0.906
Tyrrell County Unemployment Rate	-0.778
Estimated Net Migration	0.524
Housing values	0.943
Utility Revenues	0.800
Total Water Use	0.890
Solid Waste Collected (tons)	0.162
Traffic Count – road near Palmetto-Peartree Preserve	0.200
State Indicators	0.282*
Employment in the travel industry	.-0.363
Ratio of tourism income to total income	-0.506
Air Pollution Score	0.467
Average School Bus Daily Miles	0.383
Water pollution (Alligator River)	0.285
Households in poverty	-0.686
Employment ratio (tourism to total)	-0.414
Response Indicator	0.782*
Expenditures attributed to the tourism industry	0.697
Utility expenditures	0.723
Public safety expenditures	0.878
Environmental protection expenditures	0.597
Economic & physical development expenditures	0.588
Human services expenditures	0.687
Culture and recreation expenditures	0.189
Number of subsidized children in day care	0.108

*composite reliability of each construct.

Completely standardized loadings, reliability, and standard errors for the remaining 18 items are presented in Table 4.2. All of the composite fit indices were above 0.7 except the state indicator. According to Garson (2006), a common rule of thumb is that an indicator should have an alpha of 0.7 to be reliable. The state indicators were retained in this initial phase of the model to test their role in the overall relationship between factors of sustainability. The revised hypothesized relationships to be tested are illustrated in Figure 4.2.

Table 4.2 Item reliability and validity of items indicating the driving force, state, and response indicators of Tyrrell County sustainability.

Constructs and Indicators	Completely Standardized Loadings	Indicator Reliability	Standard Error
Driving Force Indicators		0.736*	
Travel Industry Payroll	0.976	0.930	0.097
Local Tax Revenues from Tourism	0.985	0.905	0.093
Tyrrell County Unemployment Rate	-0.822	-0.778	0.000
Estimated Net Migration	0.439	0.524	0.000
Housing values	0.997	0.943	0.011
Utility Revenues	0.796	0.800	0.285
Total Water Use	0.921	0.890	0.000
State Indicators		0.398*	
Employment in the travel industry	0.545	.-0.385	0.018
Ratio of tourism income to total income	0.224	-0.489	0.000
Air Pollution Score	-0.936	0.524	0.106
Average School Bus Daily Miles	-0.682	0.432	0.490
Water pollution (Alligator River)	-0.220	0.294	0.123
Response Indicator		0.817*	
Expenditures attributed to the tourism industry	0.960	0.702	1.267
Utility Expenditures	0.586	0.724	0.071
Public Safety Expenditures	0.852	0.867	0.519
Environmental protection expenditures	0.553	0.597	0.249
Economic & physical development expenditures	0.520	0.584	0.271
Human services expenditures	0.563	0.690	0.525

*Composite reliability of constructs

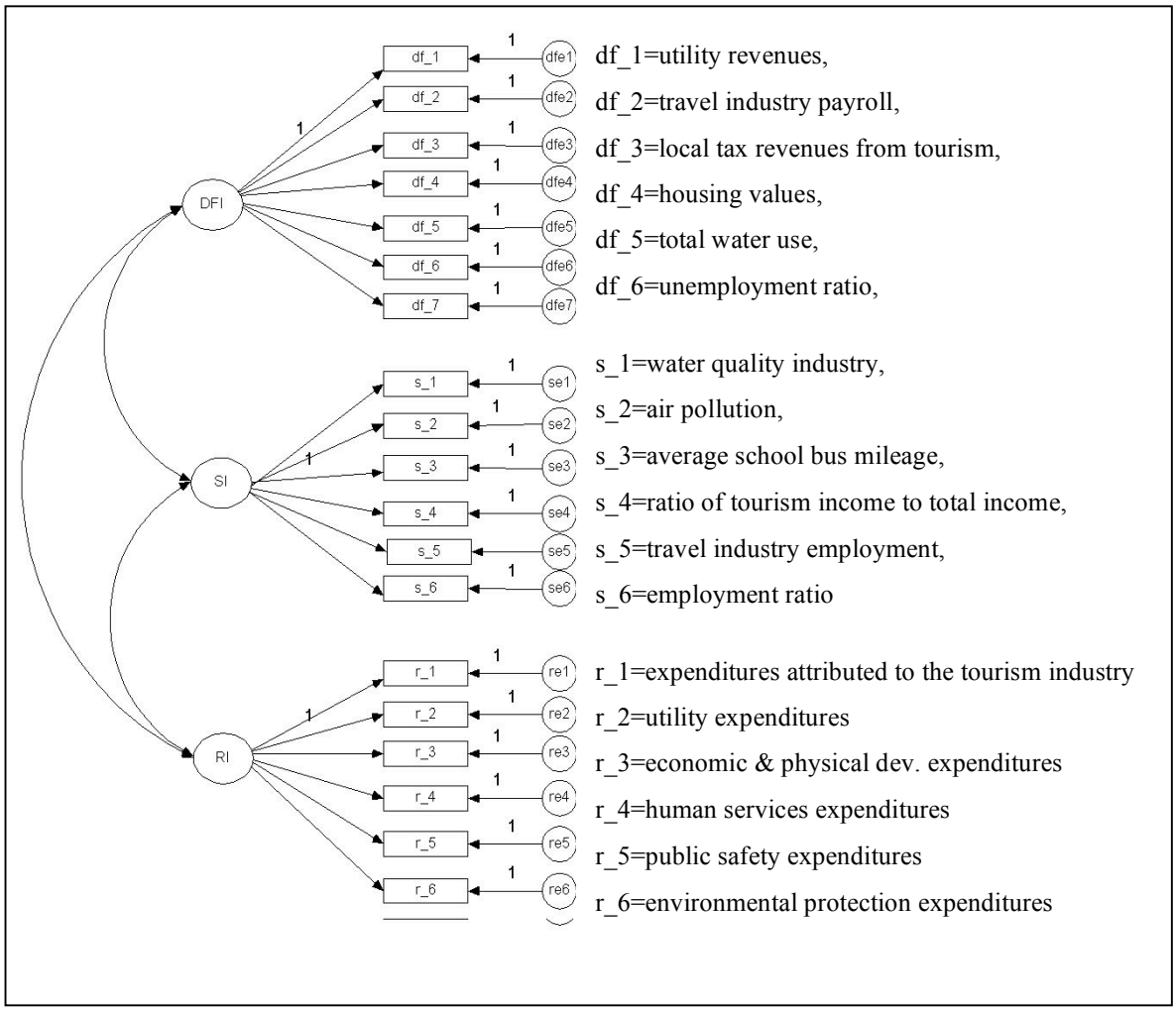

Figure 4.2: Hypothesized Model after Unidimensionality Assessment

Confirmatory Factor Analysis - Measurement

The first model to be tested using the AMOS platform was the hypothesized null model (Table 4.3, p. 85). The null model hypothesizes that all parameters that relate the latent constructs to each other are fixed at zero for the n=24 dataset. The second model is the theoretical measurement model (n=24) illustrated in Figure 4.2 (p. 84). Model fit indices range between 0 and 1, with values closer to one indicating a good model fit. If the model does not fit the data well, the confirmatory factor analysis portion of the analysis yields modification indices that are used to improve the adequacy of model fit.

Table 4.3 Fit indices for the null model, n=24, and n=250 datasets.

Models Tested	χ^2	d.f.	CFI	NFI	RFI	PNFI	Mardia's Coefficient	Bollen-Stine Boot-strap (p)
Null Model (n=24)	754.7	152						
Model 1 Measurement Model(n=24)	599.8	132	.477	.428	.337	.369	22.693	.886
Model 2 Measurement Model (n=250)	3437.7	132	.883	.879	.860	.758	2207.1	.224

*Note: χ^2=Chi-Square, d.f.=degrees of freedom; CFI=comparative fit index; NFI=normal fit index; RFI=relative fit index; PNFI=parsimony normed fit index.

Modification indices (MIs) are chi-squared statistics with one degree of freedom and "represent the expected drop in overall chi-square value if the parameter were to be freely estimated in a subsequent run" (Byrne, 2001). MIs with large expected parameter changes (EPC) for five variances in the model were indicated in the CFA portion of the analysis. Once these changes are made to the model, the model becomes the structural model in which the relationships between latent variables have been estimated. Interpretation of the MIs resulting from the CFA portion of the analysis suggested the model be modified with covariances between the error variances for housing values and utility expenditures, and between travel payroll and the ratio of average tourism income to total industry average income.

As demonstrated in Table 4.4 (p. 86), the values for the fit indices have improved, but remain inadequate to ensure any inferences about proper model fit. The sample size of model is only 24 cases (or 24 years). Structural equation modeling works optimally with sample sizes of adequate size to estimate the parameters (Ullman, 2001). In general, a sample of 200 or more is seen as adequate for small to medium models (Boomsma, 1983). Any test of this

hypothesized model must therefore take sample size into consideration. In order to determine if the proposed model fits Tyrrell County data effectively, data were imputed for each variable to obtain 250 cases. The "linear trend at point" method of replacing missing values was used. This particular method of replacing values was selected because it assumed linearity in the data and would therefore maintain linear growth in the data without any spikes. The fit indices for the n=250 model are provided in Table 4.5. These indices show marked improvement over the n=24 dataset with each approaching the higher end of scale. According to Garson, models with goodness of fit indices close to 0.9 are considered well-fitted models (2006).

Table 4.4. Fit indices for the Null model, n=24, and n=250 Datasets After Modification.

Models Tested	χ^2	Df	CFI	NFI	RFI	PNFI	Mardia's Coefficient	Bollen-Stine Boot-strap (p)
Null Model (N=24)	754.7	152						
Model 1 Structural Model (N=24)	551.7	130	.529	.474	.380	.402	22.693	.900
Model 2 Structural Model (N=250)	3326.9	130	.887	.883	.862	.750	2328.187	.264

The confirmatory factor analyses for both the n=24 and n=250 models indicated both samples violate the assumption of multivariate normality for structural equation modeling (Table 4.5). The Mardia's coefficient for each model was equal to or greater than the cut-off value of 1.96 (Garson, 2006). Lack of multivariate normality also tends to inflate chi-square values and can lead to Type I error (i.e., rejecting the model when it should be retained). Multivariate non-normality also deflates standard errors, meaning that some path coefficients are found to be significant more than they should be (Garson, 2006). Because goodness-of-fit indices are dependent on the chi-square, they can also be affected. To compensate for this

violation Byrne (2001) and Garson (2006) recommended bootstrapping. In particular, the Bollen-Stine Bootstrap (Bollen & Stine, 1993) statistic provides an alternative to both the chi-square statistics as well as the fit indices outlined above. The Bollen-Stine Bootstrap transforms the "data such that the model is made to fit the data perfectly. Bootstrap samples are then drawn with replacement from the transformed sample. The distribution of the discrepancy function across bootstrap samples is then taken as an estimate of its distribution under the hypothesis that the model is correct" (Byrne, 2001).

Bootstrapping was performed by programming AMOS to draw 200 samples from the data using the maximum likelihood estimation method to fit the model. The bootstrap analysis is similar to maximum likelihood estimation in that it provides parameter estimates based on the bootstrapped samples. AMOS outputs both the maximum likelihood parameter estimates as well as these bootstrapped parameter estimates (Garson, 2006). The strength of the hypothesized p, variance and direction of the maximum likelihood estimates and the bootstrapped estimates are for the n=24 dataset are presented in Table 4.5 (p.88).

Model Assessment

The bootstrap analysis provided me with the 95% confidence interval for the appropriateness of the hypothesized relationship path coefficients. If zero is not in the confidence interval, the researcher can conclude with 95% confidence that "the estimate is significantly different than zero" and is correct in drawing that arrow indicating a relationship. The results of the maximum likelihood estimation suggested that 13 of the 18 hypothesized paths in the n = 24 model (Table 4.5, p. 88) were statistically significant in the direction predicted at the .05 level. The results of the bootstrap estimation suggested that 16 of the 18 hypothesized paths in the n=24 model are statistically significant in the direction

Table 4.5. Maximum Likelihood Estimates & Bootstrap Results for Hypothesized Model n=24 Datasets

Construct ←Indicator	Standard-ized Regression Weights	S.E.	P	Boot-strap S.E.	Boot-strap S.E. of S.E.	95% Confidence Interval of the path
Travel pay←DF	.976	.097	<.001	.000	.000	.608 – .666 (p=.013)
Local Tax Revenues from Tourism←DF	.986	.093	<.001	.049	.002	1.489 – 1.653 (p = .011)
Tyrrell County Unemployment Rate←DF	-.820	.000	<.001	.000	.000	.000 – .000 (p=.003)
Estimated Net Migration←DF	.439	.000	.020	.000	.000	.001 – .001 (p=.014)
Housing values←DF	.987	.011	<.001	.005	.000	.227 – .249 (p=.002)
Utility Revenues←DF	.796	.285	<.001	.270	.014	1.242 – 2.224 (p=.013)
Total Water Use←DF	..921	.000	<.001	.000	.000	0.000 – 0.00 (p=.009)
Employment in the travel industry←S	-.523	.018	.003	.013	.001	0.79 –.035 (p=.006)
Ratio of tourism income to total income←S	-.217	.000	.156	.000	.000	-.001 –.000 (p=.008)
Air Pollution Score←S	.167	.106	.268	.076	.004	.323 –.558 (p=.075)
Average School Bus Daily Miles←S	.669	.490	.268	.000	.000	2.368 – 20.523 (p=.036)
Water pollution (Alligator River) ←S	.167	.123	.268	.0093	.005	.033 – … (p=.062)
Expenditures attributed to the tourism industry←R	.954	1.198	<.001	1.952	.098	2.781 – 10.363 (p=.003)
Utility Expenditures←R	.598	.071	<.001	.000	.000	.101 –.354 (p=.018)
Public Safety Expenditures←R	.858	.496	<.001	.663	.033	1.140 – 3.294 (p=.008)
Environmental protection expenditures←R	.555	.240	.002	.258	,013	.360 – 1.295 (p=.007)
Economic & physical development expenditures←R	.539	.263	.021	.289	.014	.441 – 1.437 (p=.003)
Human services expenditures←R	.568	.506	.017	.361	.018	.803 – 1.942 (p=.010)

predicted at the .05 level. The maximum likelihood estimate/bootstrap analysis was also performed for the n=250 dataset. Results of this analysis are presented in Table 4.6.

Table 4.6. Maximum Likelihood Estimates & Bootstrap Results for Hypothesized Model, n=250 Dataset

Construct ←Indicator	Standard-ized Regressio n Weights	S.E.	P	Boot-strap S.E.	Boot-strap S.E. of S.E.	95% Confidence Interval of the path
Travel pay←DF	1.000	.000	<.001	.000	.000	.622 - .624 (p=.010)
Local Tax Revenues from Tourism←DF	1.000	.001	<.001	.004	.000	1.603 – 1.607 (p=.009)
Tyrrell County Unemployment Rate←DF	-.791	.000	<.001	.000	.000	.000 - .000 (p=.003)
Estimated Net Migration←DF	.997	.000	<.001	.000	.000	.001 - .001 (p=.013)
Housing values←DF	1.000	.000	<.001	.000	.000	.241 - .242 (p=.012)
Utility Revenues←DF	1.000	.003	<.001	.004	.000	1.725 - .1738 (p=.008)
Total Water Use←DF	1.000	.000	<.001	.000	.000	0.000 – 0.00 (p=.009)
Employment in the travel industry←S	-.593	.000	<.001	.000	.000	-.005- -.004 (p=.006)
Ratio of tourism income to total income←S	.342	.000	<.001	.000	.000	.000 - .000 (p=.009)
Air Pollution Score←S	1.000	.001	<.001	.002	.000	.525 - .532 (p=.008)
Average School Bus Daily Miles←S	1.000	.004	<.001	.000	.000	1.880 – 1.904 (p=.014)
Water pollution (Alligator River) ←S	.992	.001	<.001	.002	.000	.139 - .145 (p=.032)
Expenditures attributed to the tourism industry←R	1.000	.014	<.001	.020	.001	4.435 – 4.499 (p=.012)
Utility Expenditures←R	.999	.001	<.001	.000	.000	.222 – .226 (p=.011)
Public Safety Expenditures←R	1.000	.006	<.001	.007	.000	1.640 – 1.661 (p=.018)
Environmental protection expenditures←R	.998	.003	<.001	..004	.000	.518-.530 (p=.008)
Economic & physical development expenditures←R	.998	.003	<.001	..003	.000	.560 - .571 (p=.026)
Human services expenditures←R	.998	.005	<.001	.005	.000	1.069 – 1.085 (p=.012)

If the bootstrapped parameter confidence intervals are not taken into account and only the maximum likelihood estimates considered, the data support the conclusion that only one state indicator – employment in the travel industry – provides an adequate measure of the state of sustainability in Tyrrell County. Overall, the state indicators performed less than sufficiently in a number of the analyses in AMOS to determine model fit. According to Jöreskog and Sörbom (1984), sufficiently constructed models have normally distributed standardized residual covariances. The standardized residual covariances between items in the model should be no larger than two standard deviations in order to establish reliable components of the model. State indicators repeatedly had standard deviations of the standardized residual covariances with other items in the model of two or higher in the n=24 dataset (Table 4.7, p. 91). The covariances for the n=250 model performed better overall (Table 4.8, p. 92)

Table 4.7 Standardized Residual Covariance Matrix – Test for Normal Distribution of Residual Covariances, n=24 dataset

	Standardized Residual Covariances, N=24																	
Item	df_1	df_2	df_3	df_4	df_5	df_6	df_7	s_1	s_2	s_3	s_4	s_5	r_1	r_2	r_3	r_4	r_5	r_6
df_1	0.0																	
df_2	.762	0.0																
df_3	.645	.238	0.0															
df_4	1.227	.518	.607	0.0														
df_5	-.231	.110	1.248	.212	0.0													
df_6	-.015	-.261	-.558	-.156	.002	0.0												
df_7	.023	-.209	-.488	-.064	.122	.136	0.0											
s_1	.946	2.980	.645	1.031	-.057	-.997	.784	0.0										
s_2	.021	.235	-.421	-.415	-2.99	.414	-.104	-.760	0.0									
s_3	.406	-.521	-.852	.254	-2.24	-.122	-.168	.661	.633	0.0								
s_4	-.042	.179	-.083	-.150	.701	-.032	-.009	.883	-.739	-.375	0.0							
s_5	1.062	.511	.378	.899	.356	-.592	-.406	.253	-.082	-.016	-.316	0.0						
r_1	.363	-.679	.610	.614	2.133	-.163	-.490	.291	-2.05	-.078	-.223	.560	0.0					
r_2	1.059	.572	.318	.585	1.686	-.184	-.436	-.156	-1.06	-.574	-.101	1.86	1.65	0.0				
r_3	.075	.065	.132	-.177	.331	-.495	.111	.665	-.181	-.301	-.097	.008	-.420	-.153	0.0			
r_4	-.025	-.083	-.432	-.050	.410	.000	-.012	.733	-.357	-.234	.015	-.491	-.092	-.174	.092	0.0		
r_5	.033	.342	-.584	-.063	.177	.043	.085	1.08	-.075	-.195	-.030	-.472	-.508	-.324	.104	-.003	0.0	
r_6	.087	.067	-.584	-.063	-.376	.042	.011	.653	.330	-.096	-.023	-.497	-.732	-.455	.096	-.002	.047	0.0

Table 4.8 Standardized Residual Covariance Matrix – Test for Normal Distribution of Residual Covariances n=250

	Standardized Residual Covariances, N=250																	
Item	df_1	df_2	df_3	df_4	df_5	df_6	df_7	s_1	s_2	s_3	s_4	s_5	r_1	r_2	r_3	r_4	r_5	r_6
df_1	0.0																	
df_2	.000	0.0																
df_3	.000	.000	0.0															
df_4	.000	.000	.000	0.0														
df_5	.000	.000	.000	.000	0.0													
df_6	-.003	-.002	-.001	-.001	.004	0.0												
df_7	.006	.000	.001	-.001	-.002	-.022	0.0											
s_1	.004	-.002	.003	-.001	.000	-.050	.066	0.0										
s_2	.000	.000	.000	.000	.000	.027	.000	.000	0.0									
s_3	.003	.000	.000	.000	.000	.016	-.004	.001	.000	0.0								
s_4	.000	-.005	.010	.018	.011	-.670	-.022	.064	.064	-.035	0.0							
s_5	.014	.027	.012	.003	.010	1.31	.024	-.063	-.063	.055	-9.95	0.0						
r_1	.000	.000	.000	.000	.010	-.016	-.001	-.002	.000	.000	.019	.008	0.0					
r_2	.007	-.002	-.002	-.001	-.002	-.018	.006	-.012	.000	.000	.086	-.056	-.001	0.0				
r_3	.004	-.003	-.002	.001	-.002	-.022	-.009	-.001	.000	.001	.134	-.147	-.001	.019	0.0			
r_4	.008	-.003	-.003	.001	-.003	-.062	.007	-.004	-.002	.001	.025	-.009	.000	.020	.009	0.0		
r_5	.006	.000	.000	.000	..000	-.011	.004	.004	.002	.002	.009	-.005	-.001	.004	.006	.007	0.0	
r_6	.005	-.004	-.004	-.002	-.003	-.048	.003	.006	.000	-.005	.005	-.034	.001	.004	.009	.006	.005	0.0

Model Revision

The OECD found (1997) difficulty in assigning indicators to either the state or driving force/pressure category with any complete confidence. Therefore, a model with hypothesized relationships illustrated in Figure 4.3 with employment in the travel industry as a part of the driving-force indicator set is presented.

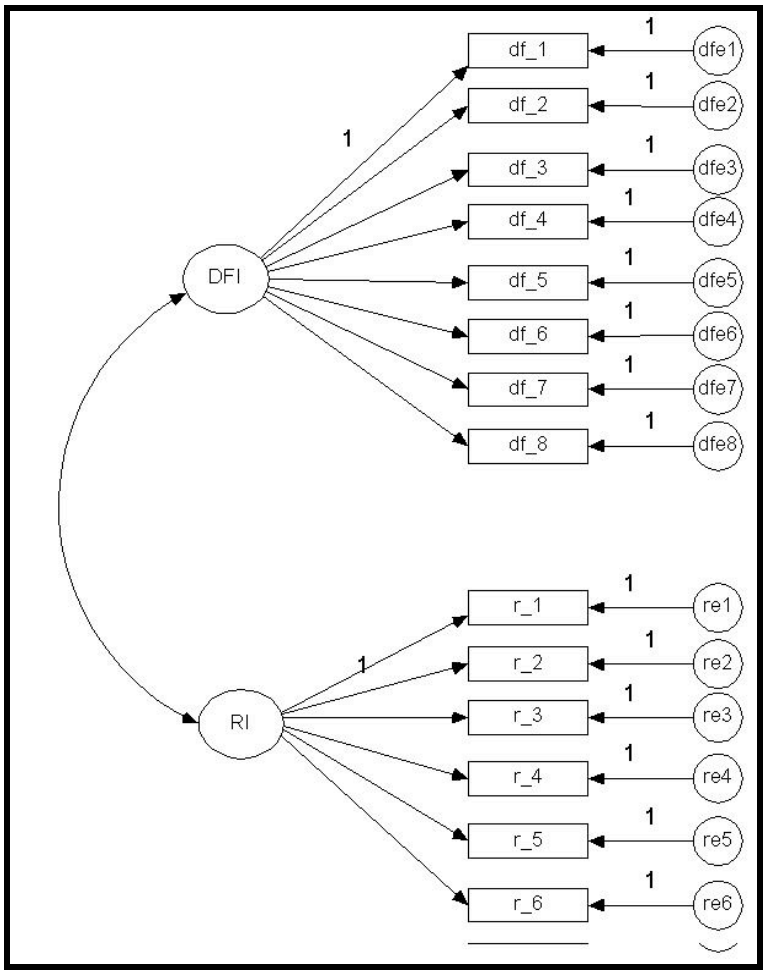

Figure 4.3 Revised Hypothesized Model: Driving Force-Response

When the state indices are excluded from the analysis (Figure 4.3) the model fit indices are improved (Table 4.9) and the strength and significance of association among the other items change (Table 4.10, p. 95) for the n=24 dataset. The fit indices for the

maximum likelihood estimation and bootstrap analysis for the n=250 dataset are presented in Tables 4.9 and 4.11 (p. 96). Coefficients for the model fit indices are improved over those provided in Table 4.4 (p. 86). The standardized residual covariances for the re-hypothesized model are provided in Table 4.12 (p. 97) (n=24) and in Table 4.13 (p. 98) (n=250).

Table 4.9 Model Fit Indices - State Indicators Removed, Employment in the Travel Industry Categorized as a Driving Force Indicator

Models Tested	χ^2	Df	CFI	NFI	RFI	PNFI	Mardia's Coefficient	Bollen-Stine Boot-strap (p)
Null Model (n=24)	302.7	75						
Model 2 Measurement Model(n=24)	311.03	76	.595	.536	.445	.448	36.421	.577
Model 2 Measurement Model (n=250)	2456.6	76	.895	.892	.871	.745	1560.278	.134

The covariance between travel employment and economic and physical development remains above the two standard deviation cutoff. This brings into question the appropriateness of the inclusion of travel employment in the model as a driving force indicator. Since the travel employment variable performs well otherwise with a standardized regression weight (-.523) significant at the p=.05 level (p=.003) and is seen as an important variable in monitoring the sustainability of a community at least partially dependent on tourism, a decision was made to retain.

Table 4.10 Maximum Likelihood Estimates & Bootstrap Results – State Indicators Removed, Employment in the Travel Industry Categorized as a Driving Force Indicator, n=24 Dataset

Construct ←Indicator	Standard-ized Regression Weights	S.E.	P	Boot-strapped S.E.	Boot-strapped S.E. of S.E.	95% Confidence Interval of the path
Travel pay←DF	.980	.097	<.001	.156	.008	.443 - .964 (p=.010)
Local Tax Revenues from Tourism←DF	.992	.093	<.001	..013	.013	.683 – 1.496 (p=.009)
Tyrrell County Unemployment Rate←DF	-.818	.000	<.001	.000	.000	.000 – .000 (p=.014)
Estimated Net Migration←DF	.465	.000	.018	.000	.000	.000 – .000 (p=.024)
Housing values←DF	.992	.011	<.001	.037	.002	.104 – ..226 (p=.009)
Utility Revenues←DF	.804	.285	<.001	.000	.000	1.191-2.296 (p=.005)
Total Water Use←DF	.928	.000	<.001	.000	.000	.000 – .000 (p=.009)
Travel employment←DF	-.593	.000	.002	.000	.000	.000 - .000 (p=.021)
Expenditures attributed to the tourism industry←R	.968	1.198	<.001	3.775	.189	1.86 – 8.904 (p=.020)
Utility Expenditures←R	.586	.071	<.000	.000	.000	1.00-1.00 (p=.000)
Public Safety Expenditures←R	.839	.496	<.002	.997	.050	.838 – 2.962 (p=.034)
Environmental protection expenditures←R	.545	.240	.023	.422	.021	.208 – 1.242 (p=.021)
Economic & physical development expenditures←R	.484	.263	.040	.610	.031	.366 – 1.160 (p=.010)
Human services expenditures←R	.563	.506	.019	.448	.022	.762 – 2.228 (p=.012)

Table 4.11 Maximum Likelihood Estimates & Bootstrap Results – State Indicators Removed, Employment in the Travel Industry Categorized as a Driving Force Indicator, n=250 Dataset

Construct ←Indicator	Standard-ized Regression Weights	S.E.	P	Boot-strapped S.E.	Boot-strapped S.E. of S.E.	95% Confidence Interval of the path
Travel pay←DF	1.00	.000	<.001	.001	.000	.6222-.624 (p=.008)
Local Tax Revenues from Tourism←DF	.999	.001	<.001	.000	.000	1.603-1.607 (p=.020)
Tyrrell County Unemployment Rate←DF	-.791	.000	<.001	.000	.000	.000-.000 (p=.004)
Estimated Net Migration←DF	.997	.000	<.001	.000	.000	.000-.000 (p=.018)
Housing values←DF	1.000	.000	<.001	.037	.002	.150-.151 (p=.004)
Utility Revenues←DF	1.000	.002	<.001	.003	.000	1.075-1.083 (p=.006)
Total Water Use←DF	1.000	.000	<.001	.000	.000	.000 – .000 (p=.008)
Travel employment←D	-.592	.000	<.001	.000	.000	.000 - .000 (p=.006)
Expenditures attributed to the tourism industry←R	.998	.014	<.001	.000	.000	4.437-4.503 (p=.005)
Utility Expenditures←R	.586	.071	<.001	.001	.000	.222-.226 (p=.010)
Public Safety Expenditures←R	.999	.001	<.001	.001	.000	.368-.371 (p=.009)
.25Environmental protection expenditures←R	.998	.000	<001	.001	.000	.116-.119 (p=.003)
Economic & physical development expenditures←R	.998	.001	<.001	.001	.000	.125-.128 (p=.018)
Human services expenditures←R	.998	.001	<.001	.001	.000	.239-.243 (p=.015)

Table 4.12 Standardized Residual Covariance Matrix, State Indicators Removed, Employment in Tourism Industry Categorized as a Driving Force Indicator, n=24 Dataset.

Standardized Residual Covariances, n=24														
Item	df_1	df_2	df_3	df_4	df_5	df_6	df_7	df_8*	r_1	r_2	r_3	r_4	r_5	r_6
df_1	0.0													
df_2	.043	0.0												
df_3	-.017	.011	0.0											
df_4	-.038	.003	-.004	0.0										
df_5	-.027	-.027	.040	-.016	0.0									
df_6	-.004	-.046	.052	-.027	-.363	0.0								
df_7	.644	-.056	.212	-.186	-.329	-.167	0.0							
df_8*	.151	.464	.071	-.236	.037	.305	.371	0.0						
r_1	.363	-.104	.032	.059	.040	-.457	-.072	-.104	0.0					
r_2	1.059	-.423	-.295	-.116	.038	-.230	.524	-1.06	-.139	0.0				
r_3	.075	-.531	.306	.146	-.300	-.363	-.630	-2.18	-.228	1.84	0.0			
r_4	-.025	-.491	-.470	-.462	-.406	-.613	.450	-.068	-.006	1.91	.721	0.0		
r_5	.033	-.015	-.020	.030	-.026	-.221	.452	-.422	-.155	.681	.878	.968	0.0	
r_6	.087	.559	-.563	-.384	-.470	-.596	.190	-.419	.139	.375	.780	.416	.691	0.0

Table 4.13 Standardized Residual Covariance Matrix, State Indicators Removed, Employment in Tourism Industry Categorized as a Driving Force Indicator, n=250

Standardized Residual Covariances, n=24														
Item	df_1	df_2	df_3	df_4	df_5	df_6	df_7	df_8*	r_1	r_2	r_3	r_4	r_5	r_6
df_1	0.0													
df_2	.000	0.0												
df_3	.000	.000	0.0											
df_4	.000	.000	.000	0.0										
df_5	.000	.000	.000	.000	0.0									
df_6	-.002	.000	.001	.001	-.005	0.0								
df_7	.005	-.001	.001	-.001	-.003	-.020	0.0							
df_8*	.003	.015	.001	-.008	-.001	1.316	.013	0.0						
r_1	.000	.000	.000	.000	.000	-.014	-.001	-.003	0.0					
r_2	.007	-.002	-.001	.000	-.002	-.017	.006	-.067	-.001	0.0				
r_3	.004	-.003	-.002	.001	-.002	-.021	-.009	-.158	-.001	.019	0.0			
r_4	.008	-.003	-.003	-.003	-.003	-.061	.006	-.020	.000	.020	.009	0.0		
r_5	.006	.000	.000	.000	.000	-.010	.003	-.017	-.001	.004	.007	.007	0.0	
r_6	.005	-.004	-.003	-.002	-.003	-.046	.003	-.045	.001	.004	.010	.010	.005	0.0

As indicated in Table 4.4 (p. 86) and Table 4.9 (p. 94), the model fit indices and standardized regression weights showed improvement over the first hypothesized model for both n=24 and n=250. All standardized regression weights were significant at the p=.05 level for both datasets. The correlations between the remaining latent variables – driving force and response – had a critical ratio of 2.364 significant at the .05 level (p=.026) and has a high covariance estimate (Table. 4.14) for the n=24 dataset. The n=250 had a similar relationship (Table 4.14) significant at the p<.001 level.

Table 4.14 Covariances and Correlations – Relationships Between Latent Variables, Driving Force Indicators and Response Indicators

Model	Covariance Estimate	Standard Error	Critical Ratio	P	Correlation
Revised Model 2, Measurement N=24	$7.48x10^{9}$	$3.16x10^{9}$	2.364	p=.018	.960
Revised Model 2, Measurement N=250	$4.45x10^{12}$	$3.39x10^{11}$	11.157	p<.001	1.00
Revised Model 2, Structural N=24	$1.30x10^{9}$	$5.79x10^{9}$	2.251	p=.024	.960
Revised Model 2, Structural N=250	$4.46x10^{12}$	$3.39x10^{12}$	11.157	p<.001	1.00

Confirmatory Factor Analysis-Structural

Interpretation of the modification indices for the revised model suggest revising the n=24 model by covarying the error terms for revenues from utilities and public safety expenditures, and between payroll in the travel industry and employment in the travel industry. For the reason that there is no obvious theoretical reason for covarying the error terms for public safety and utility revenues, that relationship is not pursued. The covariant relationship between the error terms for employment and payroll (Table 4.16) is connected

and results in a correlation coefficient between the error terms of .925 (p=.001) for the n=24 dataset and a correlation coefficient of .234 (p<.001).

Table 4.15 Covariances and Correlations – Relationships Between Latent Error Variances for Travel Employment and Travel Payroll

Model	Covariance Estimate	Standard Error	Critical Ratio	P	Correlation
Revised Model 2, Structural N=24	35318.84	10956.63	3.224	p=.001	.925
Revised Model 2, Structural N=250	2351.27	706.32	3.329	p<.001	.234

Table 4.16 Fit Indices - State Indicators Removed, Employment Industry Categorized as a Driving Force Indicator, After Modification Indices.

Models Tested	χ^2	d.f.	CFI	NFI	RFI	PNFI	Mardia's Coefficient	Bollen-Stine Boot-strap (p)
Null Model (N=24)	302.7	75						
Model 2 Structural Model(N=24)	278.1	75	.650	.585	.497	.482	36.421	.478
Model 2 Structural Model (N=250)	2444.9	75	.896	.893	.870	.736	1560.278	.114

The model fit indices (Table 4.16) reflect an improved fit in an improved CFI (.650, N=24; .896, N=250), improved NFI in the n=24 dataset (.585), improved RFI in the n=24 dataset (.497), and improved PNFI in the n=24 dataset (.482). The standardized regression weights for the hypothesized relationships are presented in Table 4.17 (p. 102) (n=24) and Table 4.18 (p. 103) (n=250). All are significant at the p=.05 level. The standardized residual covariances for the items in the structural model for n=24 also show improved fit over the measurement model (Table 4.19, p. 104), and the n=250 dataset remains relatively constant

(Table 4.20, p.105). The covariant relationship between "travel employment" and "economic and physical development expenditures" was below the cutoff of two standard deviations (-1.986). The covariance between the latent variables – driving force and response – and between the recommended covariant relationship between the error terms for travel employment and travel pay, were both significant at the 0.05 level (Table 4.16, p. 100) with a critical ratio of 2.251 for the n=24 dataset and 11.571 for the n=250 dataset.

An analysis of the estimated standardized path coefficients (standardized regression weights) in the revised model revealed the significance, strength and direction of each relationship in the model. Each path is significant and the .05 level. The correlation coefficients between the driving force and response indicators reflected a positive relationship, which suggests that human response to driving force variables, either through policy making or other means (e.g., higher expenditures on environmental protection, for example, versus increased expenditures by visitors to Tyrrell County) are positively correlated.

Results of model analysis and assessment suggest the state indicators for Tyrrell County sustainable development did not provide enough information to the model. Therefore, the state indicators were removed from the final analysis which resulted in a model of the driving force and response indicators.

This chapter outlined the results of the structural equation modeling analysis conducted to integrate the social, environmental and economic indicators of sustainability. The driving force, state, and response indicators were latent variables in the model and were measured by those items outlined by the WTO as important baseline indicators that were available for Tyrrell County.

Table 4.17 Maximum Likelihood Estimates – Final Hypothesized Structural Model, n=24 Dataset

Construct ←Indicator	Standard-ized Regression Weights	S.E.	P	Boot-strapped S.E.	Boot-strapped S.E. of S.E.	95% Confidence Interval of the path
Travel pay←DF	.976	.097	<.001	.175	.009	.436-.859 (p=.019)
Local Tax Revenues from Tourism←DF	.984	.150	<.001	.281	.014	.676-1.328 (p=.019)
Tyrrell County Unemployment Rate←DF	-.819	.000	<.001	.000	.000	.000-.000 (p=.019)
Estimated Net Migration←DF	.430	.000	.032	.000	.000	.000-.001 (p=.023)
Housing values←DF	.998	.022	<.001	.042	.002	.150-.151 (p=.004)
Utility Revenues←DF	.795	.284	<.001	.000	.000	1.160-2.294 (p=.005)
Total Water Use←DF	.917	.000	<.001	.000	.000	.000 – .000 (p=.025)
Travel employment←DF	-.640	.000	<.001	.000	.000	.000 - .000 (p=.019)
Expenditures attributed to the tourism industry←R	.962	1.120	<.001	.266	5.258	2.267-9.912 (.0130
Utility Expenditures←R	.598	.070	<.001	.000	.000	.111-.506 (p=.005)
Public Safety Expenditures←R	.847	.496	<.001	.840	.042	.932-2.941(p=.023)
Environmental protection expenditures←R	.547	.240	.021	.343	.017	.226-1.071 (p=.023)
Economic & physical development expenditures←R	.510	.262	.029	.348	.017	.382-1.087 (p=.014)
Human services expenditures←R	.562	.508	.018	.384	.019	.722-2.041 (p=.009)

Table 4.18 Maximum Likelihood Estimates – Final Hypothesized Structural Model, n=250 Dataset

Construct ←Indicator	Standard-ized Regression Weights	S.E.	P	Boot-strapped S.E.	Boot-strapped S.E. of S.E.	95% Confidence Interval of the path
Travel pay←DF	1.00	.000	<.001	.000	.000	.622-.624 (p=.006)
Local Tax Revenues from Tourism←DF	.999	.001	<.001	.000	.000	1.603-1.607 (p=.008)
Tyrrell County Unemployment Rate←DF	-.791	.000	<.001	.000	.000	.000-.000 (p=.003)
Estimated Net Migration←DF	.997	.000	<.001	.000	.000	.000-.000 (p=.018)
Housing values←DF	1.000	.000	<.001	.000	.000	.150-.151 (p=.003)
Utility Revenues←DF	1.000	.002	<.001	.002	.000	1.075-1.083 (p=.006)
Total Water Use←DF	1.000	.000	<.001	.000	.000	.000 – .000 (p=.012)
Travel employment←D	-.592	.000	<.001	.000	.000	.000 - .000 (p=.005)
Expenditures attributed to the tourism industry←R	.998	.014	<.001	.000	.000	4.434-4.503 (p=.009)
Utility Expenditures←R	.999	.071	<.001	.001	.000	.222-.226 (p=.011)
Public Safety Expenditures←R	1.000	.001	<.001	.001	.000	.368-.371 (p=.005)
Environmental protection expenditures←R	.998	.000	<001	.001	.000	.116-.118 (p=.007)
Economic & physical development expenditures←R	.998	.001	<.001	.001	.000	.125-.128 (p=.007)
Human services expenditures←R	.998	.001	<.001	.001	.000	.239-.243 (p=.012)

Table 4.19 Standardized Residual Covariance Matrix – Final Structural Model, N=24 Dataset

Standardized Residual Covariances, n=24														
Item	df_1	df_2	df_3	df_4	df_5	df_6	df_7	df_8*	r_1	r_2	r_3	r_4	r_5	r_6
df_1	0.0													
df_2	.090	0.0												
df_3	.041	.053	0.0											
df_4	-.025	-.005	-.001	0.0										
df_5	.039	.026	.104	.000	0.0									
df_6	-.020	.039	.036	.001	.121	0.0								
df_7	.796	.103	.382	-.049	-.167	-.294	0.0							
df_8*	.286	.000	.239	-.024	.188	.131	.369	0.0						
r_1	.052	.066	.079	.058	.096	-.470	.084	.063	0.0					
r_2	1.059	-.458	-.324	-.179	-.429	-.184	.594	-.897	-.173	0.0				
r_3	.039	-.625	-.395	.022	-.377	-.256	-.606	-1.99	-.323	1.734	0.0			
r_4	1.084	-.477	-.449	-.473	-.377	-.613	.543	.045	.013	1.878	.653	0.0		
r_5	1.276	-.026	-.022	-.016	-.015	-.192	.570	-.235	-.161	.615	.756	.953	0.0	
r_6	.673	-.556	-.554	-.406	-.453	-.585	.273	-.299	.145	.339	.706	.414	.666	0.0

Table 4.20 Standardized Residual Covariance Matrix – Final Structural Model, n=250 Dataset

Standardized Residual Covariances, n=24														
Item	df_1	df_2	df_3	df_4	df_5	df_6	df_7	df_8*	r_1	r_2	r_3	r_4	r_5	r_6
df_1	0.0													
df_2	.000	0.0												
df_3	.000	.000	0.0											
df_4	.000	.000	.000	0.0										
df_5	.000	.000	.000	.000	0.0									
df_6	-.001	.000	.001	.001	.006	0.0								
df_7	.005	-.001	.001	-.001	-.003	-.020	0.0							
df_8*	.006	.000	.004	-.005	.002	1.31	.016	0.0						
r_1	.000	.000	.000	.000	.000	-.014	-.001	-.000	0.0					
r_2	.007	-.002	-.001	.000	-.002	-.017	.006	-.064	-.001	0.0				
r_3	.004	-.001	-.002	.001	-.002	-.020	-.008	-.155	-.001	.019	0.0			
r_4	.008	-.003	-.003	-.003	-.003	-.061	.006	-.017	-.003	.020	.009	0.0		
r_5	.006	.000	.000	.000	.000	-.009	.004	-.014	-.001	.004	.007	.007	0.0	
r_6	.005	-.004	-.003	-.002	-.003	-.046	.003	-.042	.001	.004	.010	.006	.005	0.0

CHAPTER 5

DISCUSSION

As discussed in previous sections, the purpose of this research was to develop and test a conceptual framework for sustainable tourism development. The following chapter is a discussion of the results of the analysis as well as conclusions drawn from that analysis. Limitations of the research are explained, then followed by implications, and future directions for the research are offered.

The Plimsoll Model of Sustainable Development

The Plimsoll Model of sustainable development was initially operationalized as a relational model between driving force, state, and response (DSR) indicators. The measures of these indicators were derived from the extensive catalog of potentially important characteristics of tourism destinations. Some of these items were considered "baseline issues" which were measured by baseline indicators. Data for Tyrrell County, North Carolina were collected from numerous sources. After initial evaluation of the dataset, which involved unidimensionality tests for reliability, the hypothesized model (Figure 4.2, p. 84) was developed. The analyses were conducted using two related datasets: the original dataset containing 24 years of data collected about Tyrrell County, and a second dataset of 250 data intervals primarily imputed based on the 24 year dataset. The larger dataset was necessary to ensure the stability of the model using a large dataset.

After the initial model was tested using structural equation modeling, the model was assessed for fit and the hypothesized paths between latent (i.e., unmeasured) and observed (i.e., measured) variables were assessed. All except one state indicator for Tyrrell County were not significant at the .05 level and the state indicators in general had standard residual

covariances with other indicators in the model above the two standard deviation cutoff (Garson, 2006). The model was therefore reconceptualized as a relationship between response indicators and driving force indicators.

The models run with larger sample sizes helped illustrate the stability of the hypothesized model over time and all models had Bollen-Stine coefficients that were not statistically significant and different than the null hypothesis model and could be retained. Therefore, the revised structural model that excluded state indicators and categorized employment in the travel industry as a driving force indicator was accepted. The null model and the original hypothesized model were rejected based on the overall model fit statistics. Interpretation of the fit statistics for the accepted model suggested the model fit the data according to established guidelines: $\chi^2_{(24)} = 278.1$ (P-value <.000, Bollen Stine p=.478), comparative fit index = .650, normative fit index = .585, relative fit index = .497, parsimony normal fit index = .482; $\chi^2_{(250)} = 244.9$ (P-value <.000, Bollen Stine p=.114), comparative fit index = .896, normative fit index = .893, relative fit index = .870, parsimony normal fit index = .736.

*Rejected Hypothesized Relationship*s

The Organization for Economic Cooperation and Development (OECD, 1997) proposed the pressure-state-response framework as a way to provide guidance for monitoring environmental indicators. It was based on an assumed causal relationship that human activities exert certain pressures on the environment that change the quality and quantity of resources available for human use. To respond to such changes, society creates and implements policies designed to stimulate change (OECD). The state indicators were

designed to provide information on the "state" of environmental conditions over time, not the pressures being exerted on them. The OECD found, however:

> "the distinction between environmental conditions and the pressures may be ambiguous and the measurement of environmental conditions can turn out to be difficult or very costly. Therefore, the measurement of environmental pressures is often used as a substitute for the measurement of environmental conditions" (p. 11).

When the relationships between driving force-state-response indicators are modeled to examine the statistical relationships between indicators, the difficulty in deciding when to categorize an indicator as driving force or state appears to be echoed. The state indicator for Tyrrell County, which was measured by air pollution, water quality, the ratio of average tourism income to total average income, average daily school bus mileage, and travel employment, had poor fit indices for the model overall and standardized regression weights that, though large, were not significant at the .05 level. Covariances of the state indicators with each other and with other items in the model exceeded the two standard deviation cutoff. Correct models, according to Jöreskog and Sörbom (1984), have standardized residual covariances with normal distributions. Therefore this hypothesized relationship was rejected.

Supported Model Relationships

Driving Force Indicators

> The driving force indicator of sustainability is defined as one that indicates: Human activities, processes, and patterns that have an impact on sustainable development. These indicators provide an indication of the causes of positive and/or negative changes in the state of sustainable development. Driving force indicators

pertain to developments at the company level, in branches of industry or economic sectors, and also social trends" (Mortensen, 1997, online).

The hypothesized indicators (and WTO baseline indicators) of the driving force indicator of sustainability in Tyrrell County were originally:

- Travel industry payroll (economic benefits of tourism)
- Local tax revenues derived from tourism (economic benefits of tourism)
- Tyrrell county unemployment rate (tourism seasonality)
- Estimated net migration (effects of tourism on communities)
- Housing values (effects of tourism on communities)
- Utility revenues (energy management)
- Total water use million gallons/day (water availability and conservation)
- Solid waste collected, tons (solid waste management)
- Traffic count for Palmetto-Peartree Preserve adjacent road (controlling use intensity).

After a test for unidimensionality solid waste collected and traffic count data were excluded from the study, but the final model included travel industry employment. The strongest indicators of the overall driving force indicators were total water use, revenues from utility use, housing values, local tax revenues from tourism, and travel industry payroll. In general, if the latent variable, driving force , increases by a magnitude of one, the measured indicators increased by .980 (travel pay; economic benefits of tourism), .992 (local tax revenues, economic benefits of tourism), .992 (housing values, housing issues), .804 (utility revenues, energy management) and .928 (total water use , water availability and conservation).

The Tyrrell County unemployment rate was negatively correlated with the driving force indicator (as the overall driving force indicators increases by one factor, the

unemployment rate falls by .818 factors). This finding suggested that as time passes and the overall factors contributing to the development of Tyrrell County increase in magnitude, the unemployment rate falls at a nearly equal magnitude.

Employment in the travel industry in Tyrrell County is also negatively weighted to the overall driving force indicator suggesting the number of individuals employed in the travel-industry related jobs falls by .640 factors as the driving force of sustainable development increases by one factor. What this finding may suggest is that, while payroll attributed to the tourism industry is nearly equal to the overall driving force indicator in overall magnitude (.976), the number of people employed in that industry doesn't increase. This finding has implications for the nature of tourism industry employment in Tyrrell County. If the number of people necessary to accommodate visitors to the region is not high, there may be opportunity for a higher salary. This has implications for the level of service available to visitors to the county: if not enough people fill the demand for visitor services, visitors may not stop in the area on the way to Dare County or other Outer Banks locations.

Estimated net migration (effects of tourism on communities) is positively related to the overall driving force indicator, yet does not hold the magnitude of weight that the other indicators in the model do (.456). This regression weight suggested that, for every increase in a magnitude by one in the overall, the estimated net migration increases by approximately half that amount. A number of factors may be contributing to this finding. Migration trends in the United States indicate that populations in urban areas have grown at higher rates than populations in rural areas (Beale, 1994). Tyrrell County is sparsely populated with most of its residents in or near Columbia, the largest community in the county and the county seat. It holds a "Tier One" classification in the state, indicating its status as an economically stressed

rural county. The largest employer in Tyrrell County is Captain Neill's Seafood, Inc., a seafood cannery and crabmeat manufacturer. Traditional industries have been agriculture and fishing, yet as land prices and property tax rates increase many individuals are deciding to leave the county for prospects in other regions. Out-migration is a growing trend in North Carolina coastal counties in particular, as new condos large coastal communities replace fishing industry infrastructure (Collins & Price, 2006). Tourism is often identified as a tool to supplement declines in other industries and halt increasing rates of out-migration. For example, in a USDA study of net migration in the Great Plains, tourism and other service industry jobs were seen as having a positive effect on net migration as natural amenities were increasingly seen as tourism destinations in the region (Cromartie, 1998). Tourism can also increase migration into a region as the number of service industry jobs increases as well as a demand to fill them (Williams and Hall, 2000).

When seen in light of the former indicator, tourism employment, this is an interesting result. The slow growth in net migration in Tyrrell County, possibly attributed to out-migration related to economic changes, could be increased if jobs in the service industry in general and the tourism industry in particular are increased.

Response indicator

The response indicator of sustainability is defined as one that illustrates:

> the extent to which society is responding to environmental changes and concerns. Society responses refer to individual and collective actions a) to mitigate, adapt, to or prevent human-induced harm to the environment, b) to halt or reverse environmental damage already inflicted and c) to preserve and conserve nature and natural resources (OECD, 1997).

The hypothesized WTO baseline indicators of the response indicator of sustainability in Tyrrell County were originally:

- Expenditures attributed to the tourism industry (economic benefits of tourism)
- Utility expenditures (economic benefits of tourism)
- Public safety expenditures (economic benefits of tourism)
- Environmental protection expenditures (economic benefits of tourism)
- Economic and physical development expenditures (economic benefits of tourism)
- Human services expenditures (economic benefits of tourism)
- Culture and recreation expenditures and (economic benefits of tourism)
- Number of subsidized children in day care (effects of tourism on communities)

After testing for unidimensionality, culture and recreation expenditures and number of subsidized children in day care were removed from the analysis. The strongest significant relationships among the latent variable, response indicators, and the indicator variables were between expenditures attributed to the tourism industry and public safety expenditures. In general, as the overall response indicator increased by a magnitude of one, these indicators increased by .968 and .839, respectively. Interestingly, the findings suggest that public safety expenditures increase with nearly the same magnitude as expenditures made by visitors to the Tyrrell County area as the overall response indicator increases.

Public safety, human services, environmental protection, utility, and economic and physical development expenditures were included in this analysis as a substitute indicator for the amount of tourism revenue going toward the cost of community services. Although all of these indicators have a positive relationship to the latent variable, response, the magnitude of the weight of each of these indicators was approximately half of that of the overall indicator.

Utility (.586), environmental protection (.545), economic and physical development (.484) and human services expenditures (.563) fund the availability of community services in Tyrell County (Table 4.10, p. 95):

- Utility expenditures: water and sewer services.
- Environmental protection expenditures: garbage and landfills, drainage and watersheds, cemeteries, and other environmental protection projects.
- Economic and physical development expenditures: planning and zoning, economic development, community development, special employment programs, and other economic and physical development.
- Human services expenditures: health, mental health, legal aid, subsidies paid to hospitals, and other human services (North Carolina Department of State Treasurer, 2006).

Without knowing the increase of fee rates for these different services in Tyrrell County, ascertaining a direct cause for the lower weights of these factors associated with the response indicators is impossible. However, speculation could indicate that the general need for these services has not risen over the past 24 years as quickly as the demand for public safety services.

Relationship between driving force and response indicators

The relationship between the latent variables, driving force and response, as illustrated in Table 4.14, is significant for all models at the .05 level. The critical ratio, or the standard deviation of the covariance estimates for the variables, implies the covariant path between them is significant and positive – as one increases, the other increases with it. A directional relationship is difficult to ascertain. What the statistical relationship may indicate

is that there are responses to driving forces in the system. As a response is instituted, the driving forces move forward. An example may be that, as expenditures are made on economic and physical development in Tyrrell County, the infrastructure can support more tourists. If more tourists visit the county, the pressures they place on the infrastructure may require increased expenditures.

WTO Recommended Indicators and Relevancy to Tyrrell County

Analysis of the estimated standardized path coefficients in the models reveals the significance, strength, and direction of the hypothesized relationships. In the standard use of structural equation modeling, the strength and significance of the relationships of measured to latent variables helped the researcher determine which relationships were important to the model and which were not. However, in the case of this exploration into the relationships among indicators of sustainability at a tourism destination, both significant and non-significant and strong and "weak" relationships were explored equally.

The WTO suggested 12 baseline issues that were deemed important to the sustainability of a tourism destination community (WTO, 2005). From Table 3.4 (pp. 65), those issues were:

- Local satisfaction with tourism
- Effects of tourism on communities
- Sustaining tourist satisfaction
- Tourism seasonality
- Economic benefits of tourism
- Energy management
- Water availability and conservation

- Drinking water quality
- Sewage treatment
- Solid waste management
- Development control
- Controlling use intensity

The baseline indicators (i.e., or substitute indicators) were available for ten of these categories, and after unidimensionality tests for primary level indicators (i.e., driving force, state, response), this number was decreased to nine. After the model analysis and revisions, the state indicators were determined not to be contributing to the overall fit of the model. The following indicators and baseline issues were removed:

- Solid waste management - solid waste collected (tons)
- Controlling use intensity - traffic count for road adjacent to the Palmetto-Peartree Preserve
- Economic benefits of tourism - Ratio of average tourism income to total average income
- Limiting environmental impacts of tourism activity/air quality - air pollution
- Effects of tourism on communities - average daily school bus mileage
- Water availability and conservation - Alligator River water quality
- Effects of tourism on communities - households in poverty in Tyrrell County.
- Economic benefits of tourism - employment ratio of tourism to total industry
- Economic benefits of tourism - culture and recreation expenditures

Conventional wisdom regarding the use of structural equation modeling suggests the items that remained in the analysis with strong and significant standardized regression weights

represent the relationships between those variables that indicate the driving force and response indicators of sustainability. This approach would suggest that the indicators listed above are not important in understanding the relationship between the driving forces of and responses to sustainable development in Tyrrell County. When and if Tyrrell County planners and decision-makers use this information to make decisions about tourism issues, the indicators that should be paid attention to are those that are important to understanding Tyrrell County development.

The tourism industry in Tyrrell County is, in relative terms, in its tourism infancy. Compared to nearby counties such as Dare and Hyde, Tyrrell only recently started a conversation about enhancing its tourism product. The factors that were excluded from the study, therefore, may not yet be relevant to the overall sustainability of the community (see future research directions, below). As seen in the n=250 dataset results, the state indicators do eventually become statistically significant to the model performance (Table 4.6, p. 89). In particular, the state indicator "ratio of tourism employment to total employment" provided information about the 'state' of the tourism industry compared to the other industries relevant to the Tyrrell County economy. If the ratio of tourism employment to total employment remains stable, then it would be reasonable to assume that the rate of growth or recession of tourism employment was in-line with the rest of the industries in Tyrrell County. Without knowing the state of employment in addition to the number of individuals employed in the tourism industry, however, this is speculation.

Therefore, an alternative approach to the use of structural equation modeling is suggested: those indicators that would otherwise be see as unimportant to the model relationships because they do not have significant standardized regression weights are

reconceptualized to instead indicate those items in the model that should be monitored precisely because they are not important to sustainable development *yet*. Alternatively, one could interpret the findings to suggest that the state indicators dropped out of the analysis because the size of the boat is unknown, or that the residents of Tyrrell County have yet to decide the size of the boat. As a community with a tourism product in its beginning stages, Tyrrell County have not reached a point in the planning process to underline how much development is enough. Retaining the state indicators in the model may provide a tool for indicating when those limits are reached, i.e., when they become important components of the model, perhaps a development threshold his being reached.

Limitations

There were limitations of this inquiry into the sustainable development of tourism destinations. Primarily, the limitations are in the data used for the analysis. Data availability, substitution and measurement introduced threats to the construct validity of the model. Other limitations are found in the choice of data analysis method used, structural equation modeling.

Construct Validity

Construct validity is defined by Garson (2002) as the validity associated with the logical use of items used to measure concepts. Numerous sources, estimation, and measurement methods are inherent characteristics of the model, and many of these data were proxies (see Table 3.6, p.71) for example, Tyrrell County government expenditures on public safety, environmental protection, and economic development were interpreted as response variables in the model and assumed to represent funds generated for the community that could be spent on community services. The metadata for this data do not provide information regarding the

foundation for such expenditures, i.e. we cannot know if such expenditures were in response to demand or a result of policy, or both. Construct validity is also threatened by the presence of data estimated based on other data. For example, data about the tourism industry for Tyrrell County were based on the Travel Industry Association of America's economic impact model as applied to North Carolina. This approach estimated impact based on allocative estimates derived from national and state-wide data. This allocation methodology potentially introduced a significant amount of error into the analysis as well as threatens construct validity.

When data were not available for certain years in the n=24 data set, they were imputed using the linear trend at point method in SPSS (SPSS Inc, 2005). Although this imputation method uses "real world" data to create its imputed estimates, the estimates introduced error into the model. A majority of the data for the n=250 dataset were generated almost exclusively by the linear trend at point imputation method. This dataset was used, therefore, to test model stability and no major conclusions were drawn from its use. A number of different items were calculated from the datasets (Table 3.5, p. 69). Any error present in the dataset used to estimate the larger sample or calculate new variables would be carry through to new data points.

Another potential criticism of the model could be found in the compounding and influencing factors that are exogenous to the model, or those variables that have an impact on the development of Tyrrell County but are not necessarily influenced by development. For instance, the expenditures attributed to tourist visitation in Tyrrell County (variable r_1) may be and is most likely related to the overall function of the U.S. and global economy, and is not necessarily a response to tourism development in Tyrrell County. The purpose of this

research, however, was to model relationships between indicators and not necessarily what influences the indicators. Future iterations of the model development will address these exogenous variables.

When indicators were unavailable or were substituted with what were thought to be adequate surrogates, the viability of the model itself comes into question. However, because the indicators proposed by WTO were generated using panels of experts as well as stakeholders with no initial scientific determination of their relevance together, this limitation is noted as one that could provide structure to future research. As a preliminary step toward a larger tourism destination sustainable development model, however, the process of constructing a model based on the data that were available was seen as a necessary first step. The model can be modified and verified as more data become available.

Assumptions in Structural Equation Modeling

The decision to used structural equation modeling for the data analysis method was based on its ability to analyze the structural relationships between latent (or unmeasured) variables using measured indicators. As stated above, the use of structural equation modeling in this study was unorthodox and therefore some of the assumptions made when using SEM were stretched to accommodate. Most of the assumptions of the SEM method are similar to assumptions made in other multivariate statistical methodologies, however, those assumptions pertaining to data level, interactions, and uncorrelated error are relaxed (Garson, 2006). SEM assumes multivariate normality in both the indicators and the latent dependent variables. Data used in this analysis violated this assumption. According to Bollen and Stine (1992), Byrne (2001) and Garson (2006), the Bollen-Stine Bootstrap corrects for multivariate normality as explained previously in chapter 4.

SEM also assumes low multicollinearity among the independent or observed variables. Correlation among the observed variables can be modeled in the explicitly in SEM (Garson, 2006; Reisinger, & Turner, 1999). Although there was high correlation among observed variables in the model, those items were not removed. Explorations of the mathematical relationships between the driving force, state, and response variables (i.e., the engine/fuel, cargo, and pilot) are in their preliminary stages and many of the data were either substituted or not included. Although SEM uses the units of measurement of the indicator variables (dollars, parts per million, per capita) and there is no apparent need to convert measures compared to other computer modeling tools (Johnson, Huggins, & deNoyelles, 1991), questions regarding data transformation through either standardization or other methods remain and will be addressed in future study. Results also need to be interpreted in terms of the units of measure for the constructs measured by the indicators (Reisinger & Turner, 1999). Therefore, answers to the question of what "units" of sustainability are need to be answered. According to Hymen & Leibowitz (1999), use of SEM, even when the best data are not available, can facilitate attempts to formalize knowledge of systems in order to improve judgment (e.g., planning).

As mentioned previously, SEM is sensitive to sample size and therefore "larger" sample sizes of 200 or greater are recommended (Boosma, 1983; Garson, 2006; Reisinger & Turner, 1999). Large sample sizes help prevent model underidentification or just-identification, which occurs when the number of parameters is less than the number of data points. Although this was not a problem with the n=24 model, the n=250 model was developed to test model stability with large sample size and ensure there were an adequate number of data points for the number of parameters to be measured.

SEM assumptions are ambiguous regarding the use of time-series data. Uncorrelated error, linearity, interval level data, and low instances of multicollinearity are assumed. Autocorrelation does not appear to be addressed specifically in the literature (Garson, 2006), although it can be the source of model identification problems (Reisinger & Turner, 1999). Future iterations of model development will, however, take into consideration the assumptions outlined as important when working with time series data. Garson highlights these assumptions as stationarity (i.e., invariant mean and variance), controlled autocorrelation, cautious use of linear techniques to analyze nonlinear data, randomness of system shocks (or shocks that are controlled for in the analysis), and uncorrelated random error. An SEM that uses time series data should follow closely these assumptions, especially when the mathematical model is constructed in an attempt to serve as a predictive tool.

Implications and Future Research

As noted above, indicators outlined by experts and stakeholder groups are not always available for analysis in a tourism destina=tion sustainability model. Therefore, substitute indicators seen as adequate surrogates for unavailable measures are required. In the future, as more and better data become available, the model can be modified and verified to provide a better "picture" of the current state of development and tourism in Tyrrell County and potentially make recommendations regarding planning decisions (in the form of response variables).

Tourism in Tyrrell County, as stated above, is in its relative infancy. Community plans that addressed tourism product development in Tyrrell County surfaced only in the late 1980s. Therefore, the model in its final iteration in this inquiry may reflect only those communities in the first stages of tourism development. The next step in model testing is to

collect similar data for a county with a more developed tourism product in a similar geographical area and compare results of an analysis of that county to those of Tyrrell County. After model verification and refinement through comparative testing, it may be possible to move the model from a realistic one to a predictive one.

Broader implications for Tyrrell County underline the need for both capital and development investment in tourism product development. Emphasis should be place primarily on investment in marketing plans to draw tourists to the region. Infrastructure to support a tourism product is useless if tourists continue to regard the county as a pit-stop on the way to Dare County and other Outer Banks attractions. Specifically, a marketing plan that targets tourists seeking activities unique to Tyrrell County will be necessary. Finally, monitoring tourism activity in Tyrrell County will provide the type of data necessary to verify this model and increase its reliability as a predictive tool. Accounting tourism visitation with traffic count studies near attractions, tourism expenditures with longitudinal economic impact studies, and visitor perceptions of the attractions will all prove crucial. Monitoring the state indicators, despite their removal from the overall model, will also provide useful information about how "big" the boat is getting, and if the size needs to be limited.

The model also tested the general baseline issues for a tourism destination outlined by the WTO by applying them to a realistic situation using the Plimsoll Model of sustainable development. Another step in model testing is to take the remaining issues outlined by the WTO (health and safety indicators, tourism and poverty alleviation) to the tourism development stakeholders in Tyrrell County and survey their attitudes regarding the relevancy of indicators to how they see development of the Tyrrell County tourism product

proceeding. As enumerated in Table A.2 of Appendix A, a multitude of potential indicators of sustainable development are provided by the World Tourism Organization. Stakeholder involvement would be necessary to contextualize the indicators for the specific needs of the community, but also to make the list of potential indicators more manageable. This model provides the first (at time of printing) attempt to model the WTO's hypothesized sustainability indicators. Future iterations of model development may yield further verification of the WTO's suggested indicators and refine the model's hypothesized path diagrams to reflect reality more precisely.

The broader implications for sustainability in general and sustainable tourism development in particular bring the discussion back to the idea of systems. General Systems Theory was a theoretical guide for the preceding research and analysis. With a foundation of systems thinking, the model of tourism relationships in Tyrrell County, which is essentially the Plimsoll/DSR model of tourism, was analyzed using a relatively simple statistical method. Although the model presented in this dissertation is in every way a preliminary iteration and will go through many more, it underlines the crucial need to approach tourism destinations as complex system of interactions between social components (e.g. migration patterns of residents and workers, provision of social services to residents, and employment patterns), environmental components (e.g. air and water quality, use intensity, and community expenditures on environmental protection), and economic components (e.g. revenues from tourism, payroll for travel industry employees, costs of community services). What drives development, and therefore sustainable development, in a tourism destination is integrally related to the responses the community has – through policy or otherwise – to

those forces. More research is needed into the complex relationships underlying the elements of a community in order to understand more completely – the manifest relationships.

Finally, the model itself will undoubtedly evolve as an understanding of the relationship between the pilot, cargo, and engine/fuel is expanded. For example, a destination may have all of the components necessary to create demand among tourists – a well constructed tourism product, so to speak – yet lack an adequate policy response to institute marketing campaigns to draw the tourists in. Therefore, the engine may work fine, but not have any fuel (in the form of tourist expenditures, for example) to supply it. As a deeper understanding of indicator relationships emerges, it may be necessary to reconsider how indicators are characterized as driving force, response, or state variables. How we obtain this deeper understanding may rely on expert opinion. Questionnaires could be sent to the experts who developed both the WTO indicator list as well as those scientists who the OECD consulted regarding the Pressure-State-Response and Driving Force-State-Response frameworks to ascertain their expert opinion about indicator placement. An alternative may be consulting the community under study. Tyrrell County residents may have an insight into how indicators of their progress toward sustainable development should be classified. Future iterations of model development will include such inquiries.

Conclusions

The purpose of this study was to examine the contextual nature of sustainable development, integration of social, economic, and ecological elements of sustainable development and the apparent lack of a theoretical framework of sustainable development. The integration of social, economic, and ecological elements of sustainable development was conducted through the use of the DSR framework to conceptualize the relationships between

those pillars of sustainability. Further testing of the model using more data for Tyrrell County as well as testing using data from other counties will aid in the verification of the model and its integration of social, economic, and ecological factors in sustainability. The contextual nature of sustainable development and tourism was approached in the construction of the conceptual model and in the types of data collected, but only further model testing and verification. Only after models for specific different destinations in different stages of tourism development, different geographic and socio-demographic environments, and with different tourism products will the true contextual nature of the model be understood. Therefore, it is possible to speculate that sustainable development is not contextual: only model testing and verification will illuminate the answer.

The conceptual framework of sustainable development was the Plimsoll Model of sustainable development in tourism destinations (Figure 5.1).

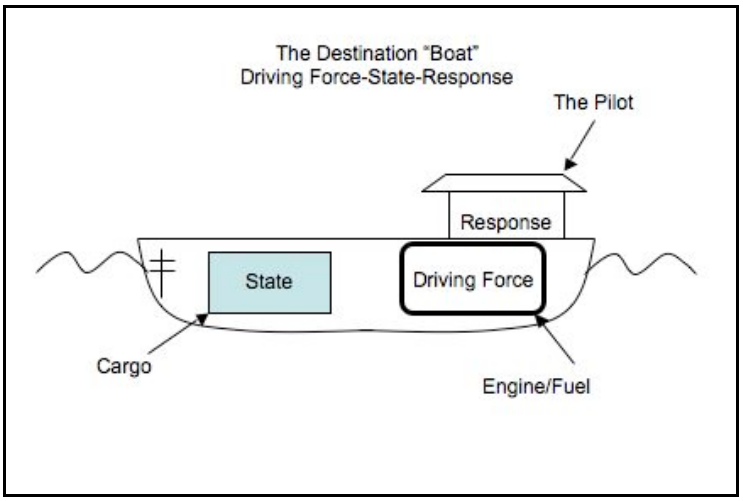

Figure 5.1. The Plimsoll Model of Sustainable Development

The model conceptualizes the tourism destination as a boat carrying its cargo (i.e., the state indicators), its engine and fuel (i.e., the driving force indicators) and the pilot (i.e., the

response indicators). Using structural equation modeling, the statistical relationship of these components was tested. In essence, a sustainable boat will have a stable cargo, adequate fuel for the journey, and a pilot that responds both to the conditions of the environment, the changing nature of the cargo, and the engine's capacity to both transport the cargo and the amount and quality of fuel available to get the cargo to port.

Results of the analysis suggest one of the following: Tyrrell County is busy constructing the boat – what it will carry is not under consideration now because the need to ensure there is a pilot to react to the driving forces of the boat is paramount, as is a decision regarding the size of the boat. This can only be understood after the wants and desires of the stakeholder population are known. What the community values in terms of providing a tourism product and protecting their cultural and natural resources will inform the scale of the boat.

Another possibility is that the pilot, engine, and fuel are sailing along with little concern for the cargo. In either case, the state of the cargo cannot be ignored. Specific types of boats carry specific types of cargo. Oil tankers are poorly equipped to ship produce from Guatemala to the United States. Therefore, a community or potential destination like Tyrrell County with aspirations to support a tourism product cannot construct a boat without consideration of that specific type of cargo. In that same vein, a ship that sails along with little or no knowledge of its cargo may load additional cargo incompatible to what it is already carrying, sail into environments treacherous to the cargo, and if disaster strikes, have little knowledge of how to mitigate the impacts of the loss of cargo.

REFERENCES

Ahn, B. Y., Lee, B. K., & Shafer, C. S. (2002). Operationalizing sustainability in regional tourism planning: An application of the limits of acceptable change framework. *Tourism Management*, *23*, 1-15.

Astleithner, F. & Hamedinger, A. (2003) The analysis of sustainability indicators as socially constructed policy instruments: benefits and challenges of 'interactive research.' *Local Environment, 8* (6) 627-640.

Anand, S. & Sen, A.K. (1994) *Sustainable human development: concepts and priorities* United Nations Development Program, Office of Development Studies Discussion Paper. Retrieved January 19, 2005 from http://www.undp.org/ods/pdfs/sustainable-human-dev.pdf.

Ap, J. (1992) Residents' perceptions on tourism impacts. *Annals of Tourism Research, 19*, 665-690.

Arbuckle, J. L. (1999). Amos 4.0 [Computer software]. Chicago, Smallwaters.

Archer, B. (1996). Sustainable tourism: An economists viewpoint. In L. Brigulio, B. Archer, J. Jafari, & G. Wall (Eds.), *Sustainable Tourism in Islands and Small States: Issues and Policies* (pp. 6-17). New York, NY: Pinter.

Ashby, W. R. (1956). *An introduction to cybernetics.* London, UK: Chapman and Hall.

Beale, C. (1994). Indicators point to a post-1990 revival in rural areas with some cautions. *Rural Trends and Conditions, 6(1)*, 3-5.

Bentler, P.M. (1990). Comparative fit indices in structural models. *Psychological Bulletin, 107,* 238-246.

Bentler, P.M. & Bonnett, D.G. (1980). Significance tests and goodness of fit in the analysis of covariance structures. *Psychological Bulletin, 88,* 588-606.

Bollen, K.A. (1986). Sample size and Bentler and Bonnett's nonnormed fit index. *Psychometricka, 51*, 375-377.

Bollen K.A. & Stine, R.A. (1992). Bootstrapping goodness-of-fit measures in structural equation models. *Sociological Methods and Research, 21,* 205-229.

Boomsma, A. (1983) *On the robustness of LISREL (maximum likelihood estimation) against small sample size and nonnormality*. Ph.D. Thesis, University of Groningen, The Netherlands.

Bramwell, B. & Lane, B. (1993) Sustainable tourism: An evolving global approach. *Journal of Sustainable Tourism, 1*, (1), 1-5.

Bramwell, B. & Lane, B. (2000) *Tourism Collaboration and Partnerships, Politics, Practice and Sustainability.* Clevedon: Channel View Publications.

Brown, K., Turner, R. K., Hameed, H., & Bateman, I. (1997). Environmental carrying capacity and tourism development in the Maldives and Nepal. *Environmental Conservation*, *24* (4), 316-325.

Buckley, R. (1999) An ecological perspective on carrying capacity. *Annals of Tourism Research, 26* (3), 705-708.

Buckley, R. (2003) Ecological indicators of tourist impacts in parks. *Journal of Ecotourism, 2*, (1), 54-66.

Buckley, R. (2003). Environmental inputs and outputs in ecotourism: Geotourism with a positive triple bottom line? *Journal of Sustainable Tourism, 2* (1) 76-82.

Butler, R. (1980) The concept of a tourist area cycle of evolution: Implications for management of resources. *Canadian Geographer, 24* (1), 5-12.

Butler, R. (1999). Sustainable tourism: a state-of-the-art review. *Tourism Geographies, 1* (1), 7-25.

Byrne, B. (2001). *Structural Equation Modeling with AMOS: Basic concepts, applications, and programming*. Mahwah, NJ: Lawrence Erlbaum Associates, Publishers.

Carlsen, J. (1997). A systems approach to understanding ecologically sustainable development of tourism (ESTD). In Faulkner, B., Tisdell, C., and Weaver, D. (eds) *Progress in Tourism and Hospitality Research Part 1*, (249-256). Proceedings of the 8th Australian Tourism and Hospitality Research Conference. Gold Coast Canberra: Bureau of Tourism Research.

Carlsen, J. (1999). A systems approach to island tourism destination management. *Systems Research and Behavioral Management, 16*, 321-327.

Checkland, P. (1993). *Systems thinking, systems practice.* New York, NY: John Wiley & Sons, Ltd.

City of San Francisco (1999) *Sustainable San Francisco*. Retrieved from: http://www.sustainable-city.org. Accessed: July 18, 2006.

Clarke, H.R. and Ng, Y. (1993). Tourism, economic welfare and efficient pricing. *Annals of Tourism Research, 20*, 613-632.

Clayton, A. and Radcliffe, N. (1996). *Sustainability: A Systems Approach.* Boulder, CO: Westview Press.

Coccossis, H. (1996). Tourism and sustainability: Perspectives and implications. In Priestly, G.K., Edwards, J.E. and Coccossis, H. (eds). *Sustainable Tourism? European Experiences* (1-21). Oxon, UK: CAB International.

Cocklin, C. (1995). Agriculture, society, and environment: discourses on sustainably. *International Journal of Sustainable Development and world Ecology, 2,* 240-256.

Collins, K., and Price, J. (2006, July 16). Development pinches ailing N.C. fishing industry. *The News and Oberver*, pp. A1, A16.

Common, M. & Perrings, C. (1992). Towards an ecological economics of sustainability. *Ecological Economics, 6*, 7-34.

Cooper, P., & Vargas, C.M. (2004). *Implementing Sustainable Development: From global policy to local action.* Oxford, UK: Rowman & Littlefield Publishers, Inc.

Cromartie, J.B. (1998) Net-migration in Great Plains increasingly linked to natural amenities and suburbanization. *Rural Development Perspectives, 13 (1),* 27-34.

Daly, H. (1996). *The Limits to Growth*. Massachusetts: Beacon Press.

de Boer, B., & Hueting, R., (2004). Sustainable national income and multiple indicators for sustainable development. *Measuring sustainable development: Integrated economic, environmental and social frameworks*. Proceedings of the May 2003 Workshop "Workshop for accounting frameworks in sustainable development." 39-52.

Dogan, H.Z. (1989) Forms of Adjustment: Sociocultural impacts of tourism. *Annals of Tourism Research, 16,* 216-236.

Doxey, G. (1976) When enough's enough: The natives are restless in old Niagra. *Heritage Canada, 2*, (2), 26-27.

Elkington, J. (2004). Enter the triple bottom line. In A. Henriques & J. Richardson (Eds.), *The Triple Bottom Line: Does It All Add Up?* (pp. 1-16). London, UK: Earthscan.

Emel, J. and Peet, R. (1989). Resource management and natural hazards. In Peet, R. and Thrift, N. (eds). *New models in geography: the political economy perspective, vol. 1,* (49-76). London: Unwin Hyman.

English, D.B.K., Marcouiller, D.W., & Cordell, H.K. (2000). Tourism dependence in rural America: Estimates and effects. *Society and Natural Resources, 13,* 185-202.

EPA (2006). *STORET*. Retrieved April 4, 2006. Accessed from http://www.epa.gov/storet/index.html

Farrell, B.H. (1999). Conventional or sustainable tourism? No room for choice. *Tourism Management, 20*, 189-191.

Farrell, B.H. & Runyan, D. (1991). Ecology and tourism. *Annals of Tourism Research, 18*, 26-40.

Garson, G. D. (2002). *Guide to writing empirical papers, theses, and dissertations*. New York, NY: Marcel, Dekker, Inc.

Garson, G. D. (2004). *Structural Equation Modeling*. Retrieved April 27, 2004 from http://www2.chass.ncsu.edu/garson/pa765/structur.htm

Giovannini, E. (2004). Accounting frameworks for sustainable development: What have we learnt? *Measuring sustainable development: Integrated economic, environmental and social frameworks*. Proceedings of the May 2003 Workshop "Workshop for accounting frameworks in sustainable development," 7-14.

Goeldner, C.R., & Ritchie, J.R.B. (2003). *Tourism: Principles, practices, philosophies*. Hoboken, NJ: John Wiley & Sons.

Gunn, C. (1994). *Tourism planning: Basics, concepts, cases*. Philadelphia, PA: Taylor & Francis.

Gursoy, D., Jurowski, C., & Uysal, M. (2002). Resident attitudes: A structural modeling approach. *Annals of Tourism Research, 29* (1), 79-105.

Gursoy, D. and Rutherford, D.G. (2003). Host attitudes toward tourism: an improved structural model. *Annals of Tourism Research, 31* (3), 495-516.

Hardy, A., Beeton, R.J.S., and Pearson, L. (2002). Sustainable tourism: An overview of the concept and its position in relation to conceptualizations of tourism. *Journal of Sustainable Tourism, 10*, (6), 475-496.

Harris, C.C., McLaughlin, W.J., & Brown, G. (1998). Rural communities in the Interior Columbia Basin: How resilient are they? *Journal of Forestry, 96* (3), 11-15.

Harris, J.M. (2000). Basic principles of sustainable development. *Global development and environment institute working paper 00-04.* Retrieved September 9, 2004 from http://www.ase.tufts.edu/gdae/publications/working_papers/Sustainable%20 Development.pdf.

Heylighen F. & Joslyn, C. (2001). *The law of requisite variety.* Retrieved October 12, 2005

from http://pespmc1.vub.ac.be/REQVAR.html.

Holling, C. S. (1993) Investing in research for sustainability. *Ecological Applications, 3* (4), 552-555.

Hopkins, A. W. (2005). *Groundswell: Stories of saving places, finding community.* San Francisco, CA: The Trust for Public Land.

Hunter, C. (1997). Sustainable tourism as an adaptive paradigm. *Annals of Tourism Research,24* (1), 850-867.

Hyman, J.B., & Leibowitz, S.G. (2001) JSEM: A framework for identifying and evaluating indicators. *Environmental Monitoring and Assessment, 66,* 207-232.

Johnson, M.L., Huggins, D.G., & deNoyelles, F. (1991). Ecosystem modeling with LISREL: A new approach for measuring direct and indirect effects. *Ecological Applications, 1* (4), 383-398.

Johnson, P. & Thomas, B. (1996). Tourism capacity: A critique. In L. Brigulio, B. Archer, J. Jafari, G. Wall (Eds.), *Sustainable Tourism in Islands and Small States: Issues and Policies* (pp. 118-136). New York, NY: Pinter.

Johnston, R.J., & Tyrrell, T.J. (2005). A dynamic model of sustainable tourism. *Journal of Travel Research, 44*, 124-134.

Jöreskog, K.G. (1993) Testing structural equation models. In K.A. Bollen & Long, J.S. (Eds), *Testing structural equation models* (pp. 294-316). Newbury Park, CA: Sage.

Jöreskog, J.G. and Sörbom, D. (1984). *LISREL-VI users guide* (3rd ed). Mooresville, IN: Scientific Software.

King, B., Pizam, A., and Milman, A. (1993). Social impacts of tourism: Host perceptions. *Annals of Tourism Research, 20*, 650-665.

Ko, T. G. (2005). Development of a tourism sustainability assessment procedure: A conceptual approach. *Tourism Management*, *26*, 431-445.

Lash, G.Y.B., & Black, P. (2005). *Red wolves: Creating economic opportunity through ecotourism in rural North Carolina. A Report for Defenders of Wildlife.* Washington, D.C.

Leopold, A. (1949) *A sand county almanac*. Oxford: Oxford University Press.

Limburg, K., O'Neill, R.V., Costanza, R., & Farber, S. (2002). Complex systems and valuation. *Ecological Economics, 41* 409-420.

Lindberg, K., McCool, S., & Stankey, G. (1997). Rethinking carrying capacity. *Annals of Tourism Research*, *24*, 46-465.

Ludwig, D., Hilborn, R., & Walters, C. (1993). Uncertainty, resource exploitation, and conservation: lessons from history. *Science, 260,* (5104) 17, 36.

Manning, T. (1999). Indicators of sustainability. *Tourism Management, 20*, 179-181.

Mannis, A. (2002). *Indicators of sustainable development*. Retrieved from http://www.ess.co.at/GAIA/Reports/indics.html. Accessed on March 28, 2006.

Martin County, Florida (2005) *2020 Vision for a sustainable Martin County*. Retrieved from: http://ap3server.martin.fl.us:7778/GOVT/depts/gmd/sustain/. Accessed: July 18, 2006.

Mathieson, A. and Wall, G. (1982). *Tourism: Economic, Physical and Social Impacts*. New York, NY: Longman Group, Ltd.

McCool, S.F. and Patterson, M. (2000) Trends in recreation, tourism and protected area planning. In D. W. Lime and W. Gartner (eds) *Trends in Outdoor Recreation, Leisure and tourism* (pp. 111-120). Wallingford: CABI Publishing.

Meadows, D.H. (2001, Winter). Dancing with systems. *Whole Earth,* 58-63.

Meyer, J.L., & Helfman, G.S. (1993). The ecological basis of sustainability. *Ecological Applications, 3* (4), 569-571.

Midmore, P. and Whittaker, J. (2000) Economics for sustainable rural systems. *Ecological Economics, 35*, 173-189.

Mowforth, M. and Munt, I. (1998). *Tourism and Sustainability: New tourism in the third world.* New York, NY: Routledge.

Mortensen, L.F. (1997). Box 1D: The driving force-state-response framework used by CSD. In *SCOPE 58: Sustainability Indicators: report of the project on Indicators for Sustainable Development.* Retrieved from: http://www.icsu-scope.org/downloadpubs/scope58/box1d.html. Accessed on March 28, 2006.

Mulaik, S.A., James, L.R., Alstine, J.V., Bennett, N., Lind, S. & Stilwell, C.D. (1989). Evaluation of goodness-of-fit indices for structural equation models. *Psychological Bulletin, 10*, 430-445.

Murphy, P. E. (1985). *Tourism: A community approach.* New York, NY: Routledge.

National Agriculture Statistics Service (2005) *North Carolina Data – Farm Statistics*. Retreived from: http://www.nass.usda.gov:8080/QuickStats/PullData_US Accessed 4/3/2006.

National Research Council Board on Sustainable Development (1999) *Our Common Journey. A Transition Toward Sustainability.* Washington D.C.: National Press. Retrieved on April 10, 2005 from http://books.nap.edu/books/0309067839/html/index.html

Newsome, D., Moore, S. A., & Dowling, R. K. (2002). *Natural area tourism: Ecology, impacts and management.* Tonawanda, NY: Channel View Publications.

North Carolina Department of Agriculture & Consumer Services (2005) *Tyrrell County statistics*. Retrieved from: http://www.ncagr.com/stats/cntysumm/tyrrell.htm. Accessed 4/3/2006.

North Carolina Department of Agriculture & Consumer Services (2005) *Dare County statistics*. Retrieved from: http://www.ncagr.com/stats/cntysumm/dare.htm Accessed 4/3/2006.

North Carolina Department of Commerce (2005). *Tyrrell County Profile*. Retreived from http://cmedis.commerce.state.nc.us/countyprofiles/files/pdf/Tyrrell_2005Q4.pdf Accessed on April 3, 2006.

North Carolina Department of Commerce (2005) *Dare County Profile*. Retrieved from http://cmedis.commerce.state.nc.us/countyprofiles/files/pdf/Dare_2005Q4.pdf Accessed 4/3/2006.

North Carolina Division of Tourism (2005) *2005 Preliminary Estimates for Tourism Expenditures – North Carolina Counties*. Retrieved from http://www.nccommerce.com/tourism/econ/countybycounty.asp. Accessed April 4, 2006.

North Carolina Office of State Budget and Management (2006). *Log Into North Carolina (LINC)*. Retrieved from http://data.osbm.state.nc.us/pls/linc/dyn_linc_main.show. Accessed June 2005 – June 2006.

North Carolina Rural Center (2005) *County profile for Tyrrell County*. Retrieved from: http://www.ncruralcenter.org/databank/profile.asp?county=Tyrrell. Accessed 4/3/2006.

North Carolina Rural Center (2005) *County profile for Dare County*. Retrieved from: http://www.ncruralcenter.org/databank/profile.asp?county=Dare Accessed 4/3/2006.

OECD (1997) *OECD environmental performance reviews: an introduction.* Retrieved from:

http://www.icsu-scope.org/downloadpubs/scope58/box1d.html. Accessed on March 28, 2006.

Oppermann, M. (1993). Tourism space in developing countries. *Annals of Tourism Research, 20*, 535-556.

Pannell, D.J., & Schilizzi, D. (1999). Sustainable agriculture: A matter of ecology, equity, economic efficiency or expedience? *Journal of Sustainable Agriculture, 13* (4), 57-66.

Pantin, C.P.A. (1968). *The relations between the science*. London: Cambridge University Press.

Parasuraman, A., Zeithami, V.A., and Berry, L.L. (1990) *Delivering quality service: balancing customer perceptions and expectations*. New York, NY: The Free Press.

Payne, R.J., Johnston, M.E., and Twynam, G.D. (2001). Tourism, sustainability, and the social milieux in Lake Superior's north shore and islands. In McCool, S.F. and Moisey, R.N. (eds). *Tourism, recreation, and sustainability: linking culture and the environment.* New York, NY: CAB International Publishing, 315-342.

Patterson, T., Gulden, T., Cousins, K., & Kraev, E. (2004). Integrating environmental, social and economic systems: A dynamic model of tourism in Dominica. *Ecological Modelling*, *174*, 121-136.

Pepperdine, S. and Ewing, S. (2001) Integrating social sustainability considerations into natural resource management. . In Lockie, S. Higgins, V. and Lawrence, G. (eds). *Environment, Society and Natural Resource Management: Theoretical Perspectives from Australasia and the Americas,* 70-83. Northampton, MA: Edward Elgar.

Peterson, T. R. (1997). *Sharing the Earth: The rhetoric of sustainable development.* Columbia, SC: University of South Carolina Press.

Pidwirny, M. (2004). The laws of thermodynamics. *Fundamentals of physical geography.* Retrieved January 19, 2005 from http://www.physicalgeography.net/ fundamentals/6e.html.

Reisinger, Y., Turner, L. (1999). Structural equation modeling with LISREL: Application in tourism. *Tourism Management, 20*, 71-88

SCN (2002) *Sustainable communities network.* Retrieved from http://www.sustainable.org. Accessed on July 18, 2006.

Sessa, A. (1988). The science of systems for tourism development. *Annals of Tourism Research, (15),* 219-235.

Sethi, V., King, W. (1994). Development of measures to assess the extent to which an information technology application proves competitive advantage. *Management Science, 40*, 1601-1624.

Seventh Generation. (2006, July 5). In *Wikipedia, The Free Encyclopedia*. Retrieved July 18, 2006, from http://en.wikipedia.org/w/index.php?title=Seventh_Generation&oldid=62235578.

Sharpley, R. (2000). Tourism and sustainable development: exploring the theoretical divide. *Journal of Sustainable Tourism, 8* (1), 1-19.

Simmons, D.G. (1994) Community participation in tourism planning. *Tourism Management, 15*, (2), 98-108.

SPSS, Inc (2005) SPSS Statistical Software Package [Computer software] Chicago, SPSS.

Sutherland, J.W. (1973) *A General Systems Philosophy for the Social and Behavioral Sciences*. New York, NY: Braziller, Inc.

Sustainability. (2006, August 3). In *Wikipedia, The Free Encyclopedia.* Retrieved August 3, 2006, from http://en.wikipedia.org/w/index.php?title=Sustainability&oldid=67515019.

Swarbrooke, J. (1999). *Sustainable Tourism Management*. New York, NY: CABI Publishing.

Ten Brink, B.J.E., Hosper, S.H., & Colijn, F. (1991). A quantitative method for description and assessment of ecosystems: The AMOEBA – approach. *Marine Pollution Bulletin, 23*, 265-270.

Tordaro, M. (1994). *Economic development, 5th edition*. New York, NY: Longman.

Tisdell, C. (1987). Tourism, the environment and profit. *Economic Analysis and Policy, 17* (1), 19-30.

Tisdell, C. (1998). Ecotourism: Aspects of its sustainability and compatibility with conservation, social and other objectives. *Australian Journal of Hospitality Management, 5* (2), 11-21.

Turner, R. K., Pearce, D., & Bateman, I. (1993). *Environmental economics: An elementary introduction.* Baltimore, MD: The Johns Hopkins University Press.

Twining-Ward, L. (1999). Towards sustainable tourism development: observations from a

distance. *Tourism Management, 20,* 187-188.

Twining-Ward, L. and Butler, R. (2002). Implementing STD on a small island: Development and use of sustainable tourism development indicators in Samoa. *Journal of Sustainable Tourism, 10* (5), 363-387.

Tyrrell County Chamber of Commerce (2005). *Tyrrell County Ecotourism Committee*. Retrieved from http://www.visittyrrellcounty.com/EcoTourism/Default.htm. Accessed April 4, 2006.

Ullman, J.B. (2001) Structural equation modeling. In Tabachnick, B.G. & Fidell, L.S. (eds) *Using Multivariate Statistics, 4th Ed.* (653-771). Boston, MA: Allyn and Bacon.

UNEP (1972). *Declaration of the United Nations conference on the human environment.* Retrieved August 3, 2006 from http://www.unep.org/Documents.multilingual/ Default.asp?DocumentID=97&ArticleID=1492&l=en

Victorianweb.org (2002). *Samuel Plimsoll's Merchant Shipping Act (1876)*. Retrieved April 10, 2005 from http://www.victorianweb.org/history/plimsoll.html

von Bertalanffy, L. (1940). Der organismus als physikalisches system betrachtet. *Die Naturwissenschaften, 28*, 521-531.

von Bertalanffy, L. (1968). *General System Theory: Foundations, Development, Applications.* New York, NY: Braziller, Inc.

Walker, P. A., Greiner, R., McDonald, D., & Lyne, V. (1999). The tourism futures simulator: A systems thinking approach. *Environmental Modelling & Software*, *14*, 59-67.

Wang, C. and Miko, P.S. (1997). Environmental impacts of tourism on U.S. national parks. *Journal of Travel Research, 35*, 31-36.

Weaver, D. & Lawton, L. (1999). *Sustainable tourism: A critical analysis*. Cooperative Center for Sustainable Tourism. Queensland, AU: Griffith University.

Weinberg, G. M. (1975). *An introduction to general systems thinking.* New York, NY: Dorset House Publishing.

Williams, A.M. and Hall, C.M. (2000). Tourism and migration: new relationships between production and consumption. *Tourism Geographies, 2 (1),* 5-27.

Williams, D.R., Vogt, C.A. & Vitterso, J. (1999) Structural equation modeling of users' response to wilderness recreation fees. *Journal of Leisure Research, 31* (3), 245-268.

WCED (1987). *Our Common Future*. New York, NY: Oxford University Press.

World Tourism Organization (1997). *What tourism managers need to know: a practical guide to the development and use of indicators of sustainable tourism.* Madrid, Spain: World Tourism Organization.

World Tourism Organization (2004). *Indicators of sustainable development for tourism destinations: A guidebook.* Madrid, Spain: World Tourism Organization.

Yoon, Y., Gursoy, D., & Chen, J.S. (2001). Validating a tourism development theory with structural equation modeling. *Tourism Management, 22*, 363-372.

APPENDIX A

Table A.1 World Tourism Organization Sustainability Issues and Indicators

WTO Indicator	Sustainability Issue	Indicator Components	Indicators
1 Wellbeing of Host Communities	1.1: Local satisfaction with tourism*	Level of community satisfaction	-Local satisfaction level with tourism**
		Problems or dissatisfaction	-Number of complaints by local residents
	1.2: Effects of tourism on communities*	Community attitudes to tourism	-Local satisfaction level with tourism -Existence of a community tourism plan -Frequency of community meetings & attendance rates -Frequency of tourism plan updates -Level of awareness of local values -% who are proud of their community & culture
		Social benefits associated with tourism.	-Number social services available to the community. -% who belives that tourism has helped bring new services & infrastructure** -Number participating in community traditional crafts/skills/customs. -%vernacular architecture preserved.
		General impacts on community life	-Number of tourists per day/week etc. -Ratio of tourists to locals ** -% locals participating in community events. -Ratio of tourists to locals at events or ceremonies -Perception of impact on the community. -% of local community who agree that their local culture, its integrity, and authenticity are being retained.

*Baseline Issue
**Baseline Indicator

Table A.1 Continued

WTO Indicator	Sustainability Issue	Indicator Components	Indicators
	1.2: Effects of tourism on communities*	Changes to resident lifestyles	-% of residents changing from traditional occupation to tourism over previous years. -Number of residents continuing with local dress, customs, language, music, cuisine, religion & other cultural practices. -Increase/decrease in cultural activities or traditional events. -No. tourists attending events and % of total. -Value of tourist contribution to local culture (amt. donations, attendance fees). -% of locals who find new recreation opportunities associated with tourism.
		Housing issues	-Percent of housing affordable for residents – housing values/owner occupied? -Mode/average distance to work/school (school bus mileage)
		Community demographics	-Number of residents who have left the community in the past year. -Number of immigrants taking tourism jobs in the past year. -Net migration into/out of community.
	1.3: Access by local residents to key assets	Retaining access to important sites for local residents	-Access by locals to key sites. -Frequency of visits by locals to key sites.
		Economic barriers to access.	-Cost of access expressed in hours of local wages.
		Maintaining satisfaction with access levels	-Perception of change in accessibility due to tourism growth. -Number of complaints by local residents regarding access.

*Baseline Issue
**Baseline Indicator

Table A.1 Continued

WTO Indicator	Sustainability Issue	Indicator Components	Indicators
	1.4: Gender Equity	Stress	-% tourism employees (m/f) suffering increased fatigue and stress as a result of work.
		Childcare	-% of tourism operators who provide day care and other benefits for employees with children
		Health & Safety	-% of tourism operators who have regulations/made commitments regarding equal gender opportunities. -% of tourism operators who promote staff awareness of occupational health, safety and issues affecting female employees.
		Transport	-% of tourism operators who provide transport for women returning from night shifts.
		Discrimination against women/men	-% employees who believe their gender has affected their job enhancement, pay or benefits..
		Opportunities for women	-Women/men as a % of all tourism employment. -Women/men as a % of all formal tourism employment. -Women/men as a % of all informal occupations. -% women/men in part-time employment
		Seniority	-% of women/men in different tourism earning categories. -% of women/men in unskilled, semi skilled, and professional positions in the industry.
		Entrepreneurs	-% of owner-operator tourism businesses run by women/men. -% of tourism businesses registered under women/men.
		Training	-% women/men tourism employees with formal training. -%women/men employees sent on training programs.
		Community tourism	-% women/men involved directly in village-based tourism projects. -%women/men involved indirectly in village-based tourism projects.

Table A.1 Continued

WTO Indicator	Sustainability Issue	Indicator Components	Indicators
	1.4: Gender Equity	Ownership	-% women/men owning/controlling village tourism businesses.
		Rewards	-Average income for women/men working in village based tourism businesses. -%women/men involved in village-based tourism satisfied with their work and rewards.
		Land ownership	-% women/men with rights to land in tourism developed areas. -% women/men holding rights to tourism leases.
		Loans	-% bank loans issued to women/men for tourism ventures. -% women/men defaulting on bank loans. -% donor grants issued to women/men for tourism ventures.
2: Sustaining cultural assets	2.1: Conserving built heritage.	Legislative basis for protection	-Number and type of new legislation or amendments introduced to preserve structures at local/state/or national levels.
		Designation	-Number and type of designation under which historic structures, monuments & districts are recognized. -Percentage of eligible sites and/or structures receiving designation.
		Funding for protection	-Amount of funds allocated to the restoration, etc. of cultural assets on an annual basis. -Voluntary contributions -Tourism contribution to preservation.
		Profile of the issue	-% change/number of electronic and print articles generated on historic structures, monuments and districts by local, regional, national and international media.
		Condition of setting and environment.	-% change in the development of the surrounding area to a cultural asset, and whether maintenance or improvements have taken place. -Condition of the building or site.

Table A.1 Continued

WTO Indicator	Sustainability Issue	Indicator Components	Indicators
	2.1: Conserving built heritage.	Threats to the integrity & authenticity of the property.	-Increase/degrease in threats and their type to the original purpose and use of a site.
3: Community participation in tourism.	3.1: Community involvement & awareness	Availability of information	-Number and types of avenues/channels used to promote sustainable tourism. -Number of places in the destination where information is available.
		Access to information	-Number of people accessing information. -Frequency of access.
		Analysis of information	-% of people that have a clear understanding of the role of sustainable tourism planning.
		Application of information	-Number of times information on sustainable tourism is used within the broader community context. -Number of agencies applying information on sustainability aspects to their strategic planning processes. -Degree to which the community is satisfied with the quality and quantity of information it receives regarding tourism issues and sustainability. -Percentage of partners and key stakeholders who are satisfied with access to appropriate information. -Percentage who agree that the right information on sustainable tourism is available to me when I need it.
		Advocacy of information	-No. of promotional opportunities relating to sustainable tourism practice. -No. of tourism operators offering information on sustainable tourism practice. -% of visitors receiving information on sustainable tourism practices provided prior to their visit to the destination and at the destination.

Table A.1 Continued

WTO Indicator	Sustainability Issue	Indicator Components	Indicators
4 Tourist satisfaction	4.1 Sustaining tourist satisfaction*	Determining whether tourists were satisfied upon leaving.	-Level of satisfaction by tourists on exit.** -Perception of value for money.** -Complaints received.
		Measuring the impact of satisfaction levels on the industry and destination.	-% of return visitors.** -Changes in average price paid per room. -Complaints registered. -Ratings by guidebooks/travel sites.
	4.2 Accessibility	Not included – not baseline issue & data not available.	
5: Health & Safety	5.1: Health	Visitor health and safety.	-Number of illness and death cases of tourists and the cause. -Number of visits by tourists to local doctors. -Reports of food poisoning. -Types of tourism involved in cases of food poisoning. -Reports of communicable diseases.
		Food Safety	% of food handlers receiving food hygiene training. -% of commercial food outlets with adequate temperature control for commercial food storage. -Food hygiene standards and regulations -Incidences of breaches of regulations. -Provision of awareness campaigns for food regulations and support to owners of food service operations. -Adequate cleaning procedures.

*Baseline Issue
**Baseline Indicator

Table A.1 Continued

WTO Indicator	Sustainability Issue	Indicator Components	Indicators
	5.1: Health	Visitor health and safety: prevention & regulations	% of commercial food outlets including street vendors with provision of adequate hand washing facilities for food handlers. -Routine pest control. -Water quality.
		Accidents	-Number of reported accidents involving tourists and their causes. -No. of publications for visitors with health and safety warnings. -% of facilities with adequate safety signage. -% staff in tourism businesses with first aid training. %-establishments with OSHA programs. -% of tourism businesses with a risk management plan -Frequency of monitoring or regular checking of OSHA measurements and risk management plans. -Number of licenses and permits for tourism businesses requiring a risk management plan. -Frequency of staff training on safety procedures. -% of establishments with training programs. % with formal monitoring of safety programs. -% of businesses in government endorsed tourism brochures with good safety procedures.
		General community health and safety .	-Vol. of waste disposal and runoff from tourism bus. -% international visitors reviewed for health issues. -% of local staff working in the tourism industry receiving development and training programs on personal hygiene. -% of tourism businesses with effective effluent treatment. -Frequency of monitoring and compliance with public health legislation. -Evidence of tourism training outcomes on hygiene being taken to the home or village settings. -Existence of collaboration with public health/promotion units to reinforce health messages.

Table A.1 Continued

WTO Indicator	Sustainability Issue	Indicator Components	Indicators
	5.1: Health	Access to health care	-% of local tourism employees receiving free/subsidized health checkups and clinics for staff & family members. -% of employees with employer sponsored comprehensive health insurance.
		Malnutrition	-Level of protection of water for irrigation of food crops and food processing -% of tourism businesses supporting local agriculture and aquaculture to maintain fresh supply of accessible local foods. -No. of employees in hospitality and food service sectors provided with nutrition education. -% of employees in tourism establishments with access to healthy in house food services. -Level of malnutrition in hotel employees.
		Quiet & safe neighborhoods	-% of community protected by reg. for noise, etc.
		Substance abuse	-No. of edu programs & policies on responsible service and use of alcohol. -No. and coverage of health programs on drug abuse.
		Smoking	-% of workplaces which are smoke free. -% of workplaces with 'Quit' incentive programs.
		Family support	-% of work places providing childcare facilities. -% of workplaces with family-friendly rostering.
		Education & training	-% of employees who are from the local community. -Number of scholarship and training opportunities for local youth. -Extent of work problems for at-risk youth.
		Access to safe drinking water, power & sanitation	-% of large tourism dev. which include infrastructure in development to benefit local community.

Table A.1 Continued

WTO Indicator	Sustainability Issue	Indicator Components	Indicators
	5.2 Coping with epidemics & international transmission of disease.	Skipped – relevant mostly to large scale tourism destinations	
	5.3: Tourist security	Incidents	-Number of incidents. -Number of tourists harmed
		Impacts of incidents on tourism sector	-Number/% change in tourist arrivals. -Number/% change in numbers employed in tourism. -Number/% change in tourism revenues. -Number/% change in occupancy rates. -Number/% hotels closed. -% change in number of direct flights.
		Perceptual effects	-Number of incidents reported in international press. -Freq. of mention of destination in international news of incidents. -Opinion of travelers of safety of destination.
		Perceptual effects	-Rating of destination in magazines/guidebooks. -Rating of site on travel warnings. -Rating of site on travelers advisory in principal countries of origin.
		Management or response to risks	-Level of expenditure on security. -Level of security at borders. -Existence of a contingency plan for tourist and visitors to the region in the event of incidents. -Existence of emergency services. -Number of tourists helped by tourist aid programs. -Number of tourists informed of security levels. -No. of tourism establishments complying with safety & security standards. -Existence of safety & security standards for attractions & est.

Table A.1 Continued

WTO Indicator	Sustainability Issue	Indicator Components	Indicators
	5.4 Local public safety	Crime	-Total number of crimes reported involving visitors. -Number of visitors charged with crimes. -Cost of destination security per annum. -Perception of severity of crime problem.
		Harassment of tourists	-Number of incidents reported. -Perception of level of harassment or anxiety.
		Health	-Number of tourist reporting health problems.
		Crime prevention & control	-Level of policing. -Cost of destination security per annum. -Level of information for tourists regarding crime and prevention
6 Capturing economic benefits of tourism.	6.1: Tourism seasonality.*	Measuring degree of seasonality	-Tourist arrivals by month or quarter.** -% of annual tourist arrivals occurring in peak month/in peak quarter. -Ratio of number of tourists in peak month to lowest month. -Occupancy rates for licensed accommodation by month.** -% of all occupancy in peak quarter. ** -Inquiries at tourism information centers by month.
		Strengthening shoulder season and low season tourism.	-% tourism authority budget spent promoting off-peak & shoulder seasons. -Number of facilities offering alternative activities during shoulder/low season. -% of main attractions open in shoulder/off season. -Special events held during shoulder & low season.

*Baseline Issue
**Baseline Indicator

Table A.1 Continued

WTO Indicator	Sustainability Issue	Indicator Components	Indicators
	6.1: Tourism seasonality.*	Provision of sufficient infrastructure year-round	-% businesses establishments open all year. -% Accommodation & services open all year. -% water, electricity, sewage, and garbage system capacity used for tourism & for locals. -Funding allocated for the operation & maintenance of infrastructure, especially in high seasons.
		Short term & seasonal employment.	-Number & persent of tourist industry jobs which are permanent/full year. -% tourist industry jobs which are for less than 6 months. -Local unemployment rate in off season.
	6.2: Leakages	Import content of services	
		Facility activity/creation	-Value of imported goods. -Value of imported services.
		Facility operation & carrying out of activities.	-Value of imported goods for visitor use & consumption. -Value of imported services, including insurance. -Foreign exchange costs of marketing/distribution. -Remittances abroad by expatriate staff. -Remittances of profits & dividends. -Remittances due to foreign debt servicing..
		Invisible leakages.	-Foreign exchange value of deteriorated resources. -Quantification of lost market/lost business value. -Foreign exchange loss due to sales of non-licensed and untaxed services. -Foreign exchange loss equivalent of social costs casued by international consumption of scarce, subsidized, and imported resources.

*Baseline Issue
**Baseline Indicator

Table A.1 Continued

WTO Indicator	Sustainability Issue	Indicator Components	Indicators
	6.2: Leakages	Number and quality of employment in the tourism sector.	-Total number employed in the tourism sector. -Retention levels of employees. -Percentage of jobs that are full time, full year. -Local unemployment rate in off-season. -Income analysis.
	6.3: Employment	Professional & personal development	-Number of employees qualified/certified. -Training funds spent per employee. -Possibility of on-the-job training.
		Lack of skilled labor.	-Ability to influence improvements in business process. -Number of workplace accidents. -Measures of errors, or resulting waste. -Tourist dissatisfaction -Complaints -% labor imported
		Contentment from work including type of work, environment, etc	-Employee satisfaction -Promotion -Income levels
	6.4: Tourism as a contributor to nature conservation	Measuring potential impact of tourism on the natural environment.	-Reports on a scientific understanding of potential environmental impacts. -% projects where tourism is evaluated. -% of conservation projects where tourism financial contribution is a component.

Table A.1 Continued

WTO Indicator	Sustainability Issue	Indicator Components	Indicators
	6.4: Tourism as a contributor to nature conservation	Source of financing for biodiversity conservation & maintenance of protected areas.	-% of the protected area, conservation site budget originated from tourism activities. -Value generated through visitor fees. -Value of contribution from operators. -Value of donations received from tourists. -% of businesses in the destination or near the site contributing to conservation. -% of tourism products with specific contribution built into the price or surcharge. -Number and % involvement in support clubs. -Number and % involvement in support clubs.
		Economic alternatives for local people to reduce exploitation of wildlife and resources.	-Value of receipts or invoices for local groups. -% of the community employed in tourism. -% of the community employed in cons. activities. -Number/membership in local programs. -Level of effort to engage locals in protection activities. -% goods & services purchased locally. -Values and % discounts or incentives for locals.
		Constituency building which helps promote biodiversity conservation by tourists.	-% of tourists participating in protection activities. -% of tourists contributing to conservation. -Level of activity designed to engage tourists in protective activities. -% of tourists aware of importance of conservation sites. -% increase/decline in after visit correspondence from former visitors. -% of locals who receive conservation materials. -% of stakeholders for whom materials are in their native languages.

Table A.1 Continued

WTO Indicator	Sustainability Issue	Indicator Components	Indicators
	6.4: Tourism as a contributor to nature conservation	Site-specific regulations	-Applied codes of conduct designed to minimize negative impact. -Percentage compliance.
		Provision of opportunities for participation by tourists in conservation.	-No. of conservation organizations coordinating for tourism activities at conservation sites. -No. conservation programs/activities built for tourist participation. -No. tour operators offering conservation activities as part of tourist programs. -Survey questionnaire about satisfaction. -% tourists receiving marketing materials which provide contribution activities. -Existence of customer code of practice & guidelines. -Vehicle and other powered agreement user codes. -Level of cultural sensitivity of educational materials.
	6.5: Community and destination economic benefits.*	Employment	-Number of local people employed in tourism.** -Ratio of tourism employment to total employment. -Average tourism wage/average wage in community. -Ratio of part-time to full-time employment. -Average tourism employee income.
		Business investment in tourism	-Number of tourism businesses in the community. -Number and type of business permits & licenses issued. -Ratio of the number of local to external businesses involved in tourism. -Asset value of tourism businesses & percent owned locally. -Longevity of tourism businesses.

*Baseline Issues
**Baseline Indicators

Table A.1 Continued

WTO Indicator	Sustainability Issue	Indicator Components	Indicators
	6.5: Community and destination economic benefits.*	Tourism revenue	-Tourist numbers. -Tourist spending/spending per tourist. -Occupancy rates in accommodation establishments. -Local GDP, % due to tourism. -Total fees collected by community for access/use of community attractions. -Revenue from business permits, licenses or concessions and taxation.
		Community expenditures.	-Existence of tourism budget/plan -Annual expenditures on tourism. -Amount and % of infrastructure expenditures for tourism. -Amount and % of total annual operating expenditures for tourism. -Cost of tourism advertising and promotion per number of tourists. -Amount and % contribution of tourism revenues to the cost of water, sewer, roads, food production, energy, waste management, air quality, human resources.
		Net economic benefits.	-Net tourism revenues accruing to the community. -Economic multipliers.
		Changes in cost of living.	-% increase/decrease in land & housing prices over time. -% increase/decrease in average family weekly income. -% increase/decrease in expenditures (groceries, transportation, leisure).

*Baseline Issue
**Baseline Indicator

Table A.1 Continued

WTO Indicator	Sustainability Issue	Indicator Components	Indicators
	6.6. Tourism & poverty alleviation	Stabilizing and improving the community's income.	-Annual total income generated by the community. -Ratio of income attributable to tourism versus traditional income generating activities. -Ratio of time dedicated to tourism versus traditional income generating activities. -Ratio of time dedicated to tourism versus tourism income.
		Improving local employment opportunities.	-Total number of workers in the community (in tourism). -Ratio of local to "outsiders" directly employed in tourism. -% local workers employed at different skill levels. -Ratio of men to women employed directly in tourism -% indigenous people employed directly by tourism.
		Operation and support of micro, small and medium sized enterprises (MSMEs), or community-based enterprises.	-No. of tourism related MSMEs operating in the community. -Incentives for MSMEs. -Capacity building for establishments and improvement of MSMEs.
		Achieving equitable distribution of tourism funds/benefits across the community.	-% workers in the community directly employed by the ratio of the top to the lowest paid local tourism worker. -Annual financial tourism to community projects. -Infrastructure development stimulated by tourism also benefiting the poor in the locality. -Number and type of development programs in place. -Community survey assessment of the usefulness and success of the various development programs.

*Baseline Issue
**Baseline Indicator

Table A.1 Continued

WTO Indicator	Sustainability Issue	Indicator Components	Indicators
	6.6. Tourism & poverty alleviation	Evaluating less tangible, non-economic, livelihood priorities.	-Annual audit of the contribution of different activities to household needs. -Survey of household capacity to fulfill livelihood priorities for the year.
		Other related issues.	-Access to key local assets.
	3.6.7: Competitiveness of tourism businesses.	Cost advantages, price & value.	-Cost/price ratios of accommodations, attractions, tours or packages compared to industry norms or ratios.
		Differentiation.	-% of tourists attracted to destination because of unique features. -Rating of destination by tourists. -Attractiveness compared to similar destinations. -Expectations met or exceeded. -Value/price rating by tourists.
		Specialty niches/focus strategy.	-Measure of uniqueness. - # of tourism businesses and support within a cluster. -% of tourism revenue due to niche products or clusters.
		Cooperation/overcoming fragmentation.	% of tourism businesses that have integrated their goals and objectives with the destination tourism strategy. -% of tourism businesses participating in cooperative initiatives. -% of marketing expenditures in cooperative initiatives. -Amount and % of public authority budget designated for supporting business development.

Table A.1 Continued

WTO Indicator	Sustainability Issue	Indicator Components	Indicators
	3.6.7: Competitiveness of tourism businesses.	Vitality of the industry	-The longevity of tourism businesses. -Resale value of tourism businesses. -Level of participation by business in tourism strategy development, and marketing initiatives. -Strength of membership in tourism industry assoc. -Strength of membership in tourism industry assoc. -Tourism revenues. -Annual profit of tourism businesses. -Occupancy rates for accommodation.
7 Protection of valuable natural assets	7.1: Protecting critical ecosystems.	Area protected and to what degree	-Existence of protected areas at the destination. -Extent of protected areas.
		Disturbance of species and fragile ecosystems particularly specific impacts on rare and endangered species.	-Health of population of key indicator species. -Breeding success rates for selected species.
		Cost of maintenance and protection.	-Cost of protection/restoration. -Tourism contribution to protection & restoration.
	7.2: Sea water quality	Contamination events which may harm the health of ecosystems/recreational users.	-Level of contamination of seawater. – fecal coliform bacteria. -Level of contamination of seawater: heavy metals. -# days beach/shore closed due to contamination. -Turbidity of water. -Alternative proxy indicators (algae bloom frequency).

*Baseline Issue
**Baseline Indicator

Table A.1 Continued

WTO Indicator	Sustainability Issue	Indicator Components	Indicators
	7.2 Sea water quality	Loss of tourism customers associated with contamination or changes in seawater quality	-Tourist perception of quality of seawater.
8 Managing scarce natural resources.	8.1: Energy management*	Measuring energy use & conservation	-Per capita consumption of energy from all sources**
		Energy management programs.	-% businesses participating in energy conservation programs.
		Use of renewable energy sources.	-% of energy consumption from renewable resources.
	8.2: Climate change and tourism	Level of damage related to extreme weather events.	-Frequency of extreme climatic events. -Value of damage to tourism sector.
		Level of exposure to risk.	-Percentage of tourist infrastructure located in vulnerable zones.
		Degree of planning for climate change impacts.	-Degree to which key tourist zones are covered by contingency or emergency planning.
	8.2 Climate change and tourism.	Impact on seashores	-value of tourism infrastructure in coastal zone below estimated maximum storm surge levels. -Value of damage done annually due to storm events or flooding. -% of tourist area and infrastructure with sea defenses.
		Impact on wildlife & biodiversity.	% of tourism dependent on viewing key species considered vulnerable to changes in climate.

*Baseline Issue
**Baseline Indicator

Table A.1 Continued

WTO Indicator	Sustainability Issue	Indicator Components	Indicators
	8.3: Water availability & conservation.*	Overall water use relative to supply.	-Water use**
		Cost & pricing of water.	-Water price per liter/cubic meter
	8.4: Drinking water quality*	Purity of the drinking water supply.	-% tourism establishments with water treated to international potable standards.**
		Impact of contamination on tourist health.	-Frequency of water borne diseases.**
		Impact of water-related contamination on image of destination.	-Perception of cleanliness of food & water.
9 Limiting environmental impacts of tourism activity	9.1: Sewage treatment*	Sewage receiving treatment.	-% sewage from the destination/site receiving treatment** -% treated sewage recycled.
		Extent of sewage treatment systems.	-% of tourism establishments on treatment systems.** -%of the destination served by storm water systems.
		Effect of sewage treatment.	-Number of reported pollution or contamination events per annum in water courses receiving effluents.
	9.2: Solid waste treatment.*	Managing total waste collected in a destination.	-Total amount of waste collected. -Waste volume produced by the destination (tones/year)/Person years.** -Waste disposed by different methods. -Waste attributable to tourism.

*Baseline Issue
**Baseline Indicator

Table A.1 Continued

WTO Indicator	Sustainability Issue	Indicator Components	Indicators
	9.2: Solid waste treatment.*	Reducing waste produced.	-Volume of waste recycled/total volume of waste.** -Number of tourism establishments collecting waste separately, capacity of collecting separated waste from local residents.
		Providing waste collection services	-% destination area covered by solid waste collection services. -Percentage of tourism establishments covered by waste collection programs.
		Hazardous substances	-Number and volume of hazardous substances in use. -% of these substances for which appropriate management & disposal policies and programs are in place. -% of employees informed and trained in the use and disposal of the substances they use.
		Maintaining a clean image for the destination.	-Quantity of waste collected from public areas and streets. -Quantity of waste strewn in public areas.** -Image of cleanliness of the destination.
	9.3: Air Pollution	Quality of air	-Number of days exceeding standards***.
		Impact of air quality on tourists & residents.	-Incidence of respiratory problems. -Number of health problems reported by tourists.
		Impact of air pollution on tourist assets.	-Cost of repair to buildings and cultural sites
		Impact of tourism sector on air quality.	-Contribution of the tourism industry to greenhouse gases.
	9.4: Controlling noise levels.	Actual noise levels.	-Noise levels at site in decibels.
		Impact of noise on tourists.	-Perception of noise. -Complaints received.

*Baseline Issue
**Baseline Indicator

Table A.1 Continued

WTO Indicator	Sustainability Issue	Indicator Components	Indicators
	9.5: Managing visual impacts of tourism facilities and infrastructure.	Design and construction of infrastructure.	-Total length of roads. -Total run of overhead electrical cables. -Presence of satellite dishes. -Presence of communication towers. -Height of water tanks -Sewage ponds (size) -Erosion on the side of roads. -Number/size of signposts.
		Night lighting	-Number of light fixtures that throw direct light. -Quality in viewing the night sky.
		Physical form	-Height of buildings (average & maximum). -Number of buildings exceeding height of natural areas. -Shapes of buildings. -Shapes of signes -Density of buildings per hectare.
	9.5: Managing visual impacts of tourism facilities and infrastructure.	Planning/Building permits.	-Existence of aesthetic considerations in planning approval processs.
		Siting and orientation	-Ridgeline or coastline continuity. -Slopes (% built on slopes). -Against natural light. -Soil erosion.
		Integration with the landscape.	-% sight cleared for development. -Number of indigenous plants removed for development. -% of landscaping done with native species. -% of site covered by indigenous plants.

Table A.1 Continued

WTO Indicator	Sustainability Issue	Indicator Components	Indicators
10 Controlling Tourist Activities.	10.1 Controlling use intensity.*	Total number of tourists visiting the destination or key sites.	-Total tourist numbers**
		Measuring and managing the intensity of use of the destination.	-Number of tourists per square meter of the site.**
		Measuring and managing use density for specific heavily used sites within destination	-Density counts for vehicle use of site. -Ratio of number of vehicles per parking space.
		Levels of use relative to design capacity/other capacity measures.	-% of total capacity used.
		Perception of use levels and crowding.	-% of tourists/local residents who it is too crowded.
11 Destination planning and control.	11.1 Integration of tourism into local/regional planning.	Performance of the tourism industry.	-Tourist numbers over time/purpose of visit. -Average length of stay. -Visitor expenditure per day. -Revenues generated from tourism. -Leakages from the economy.
		Impact of tourism on the destination.	-Traffic generated from tourism. -Ratio of tourists to locals. -Local satisfaction with tourism. -Visitor/local water useage. -Economic dependency on tourism.

*Baseline Issue
**Baseline Indicator

Table A.1 Continued

WTO Indicator	Sustainability Issue	Indicator Components	Indicators
	11.1 Integration of tourism into local/regional planning.	Quality of tourism product.	-Attractiveness of sites & facilities. -% returning visitors.
		Threats to tourism from other areas.	-Number of sites damaged by other development. -Environmental threats. -Environmental vulnerability. -Crime rate per capita.
		Existence of tourism plan or strategy.	-Up to date plan exists.
		Costs of plan.	-Plan budget. -Budget designated/spent for research and formulation. -Budget designated/spent for plan implementation. -Budget designated/spent for consultation and public participation. -Level of staff resources assigned to planning.
	11.1 Integration of tourism into local/regional planning.	Impact assessment and balance of actions.	-Impact assessment of environmental, social, cultural and economic actions recommended in plan. -No. of environmental, social, cultural, and economic actions recommended in plan.
		Public participation.	-Degree of stakeholder participation in the planning process. -% of plan objectives which have been met. -% environmental, social, cultural actions recommended in plan which have been implemented.
		Legislation	-% accommodation units using primarily local architecture; -% that have completed an environmental impact statement. -% tourism facilities and service providers regularly inspected for environmental health and safety. -Number of incidents of non-compliance with regulations.

Table A.1 Continued

WTO Indicator	Sustainability Issue	Indicator Components	Indicators
	11.1 Integration of tourism into local/regional planning.	Monitoring sustainable tourism.	-Sustainable tourism indicators developed and monitored.
		Government understanding of sustainable tourism.	-% public sector employees with tourism training. -Level of tourism sector involvement in public policy.
		Private sector cooperation for sustainable tourism.	-% tourism managers with environmental training. % tour operators and hotels with environmental strategy or policy.
	11.2 Development Control.	Whether any land use or development planning process exists explicitly incorporating tourism.	-Existence of a land use or development planning process including tourism.. -% of area subject to control. -% of area designated for tourism purposes.
		Whether or not there is systematic enforcement of the plan and its criteria.	-Existence of review procedures. -Number of charges for plan, zoning or site plan violations.
		Extent & effectiveness of monitoring & control processes.	-Existence of specific criteria for tourism dev. control in plans. - % building proposal receiving environmental review.

Table A.1 Continued

WTO Indicator	Sustainability Issue	Indicator Components	Indicators
	11.3: Tourism-related transport	Number of tourism-related mobility patterns.	-Tourist numbers visiting site. -Seasonality of tourism and length of stay. -Annual number of same-day visitors. -Total miles traveled per tourist per trip. -Modes of transport used by tourists.
		Access to the holiday destination.	-Density of roads. -Density of public transportation. -Annual levels of investment in public transport. -Frequency, capacity of services and use levels. -Number of direct flights, etc. -Time of travel by passenger to destination.
		Journey time and reliability.	-Ratio of public passenger transport versus private transport speed to reach destination. -Ratio of travel expenses by public versus private transport to reach destination -Level of air/ground emissions for passenger transport during holiday periods. -Level of noise pollution.
		Safety.	-No. of transport accidents and fatalities during peak periods. -Trends in the number of days per year on which fixed air pollution thresholds are reached. -Level of facilitation of information and services.

APPENDIX B

Source: North Carolina Center for Geographic Information and Analysis, BasinPro 8 Environmental & Infrastructural Databases (2006).
Map Generated by: Jerusha B. Greenwood, July 24, 2006

Figure B.1 Tyrrell County and Vicinity

APPENDIX C

Table C.1 Variables in Final Model

Indicator Name and code	Description	Driving Force – State – Response	Source
Travel Payroll	Travel Payroll is the estimated total employment generated by domestic travel spending at the county level during the calendar year. These estimates are produced through the Travel Economic Impact Model.	DF	LINC: State Department of Commerce.
Travel generated local tax receipts	Travel generated local tax receipts is the revenue generated by domestic travel spending at the county level during the calendar year. These estimates are produced with the Travel Economic Impact Model	DF	LINC: State Department of Commerce.
Unemployment rate	The unemployment rate of Tyrrell County	DF	LINC; North Carolina Department of Commerce Annual Labor Force and Employment report.
Housing values (median value of owner occupied units)	The resident's estimate of the current dollar value of the property. For vacant houses, it is the asked price for the property.	DF	LINC; Bureau of the Census – Census of Population and Housing.
Estimated net migration	The net migration for the fiscal year.	DF	LINC; North Carolina Office of the Governor, Population and Migration.
Utility revenues	Revenues received by the county for water and sewer charges.	DF	LINC; North Carolina Department of State Treasurer.

Table C.1 Continued

Indicator Name and code	Description	Driving Force – State – Response	Source
Total water use	Average annual rate of withdrawal of water from surface and ground water sources for all uses by county in millions of gallons per day.	DF	LINC; North Carolina Departement of Environment and Natural Resources
Travel employment	The estimated total employment generated by domestic travel spending at the county level during the calendar year. These estimates are produced with the Travel Economic Impact Model	S	LINC; North Carolina Department of Commerce
Average tourism wage/average wage in the community	The ratio of tourism income to total income in Tyrrell County	S	LINC; North Carolina Department of Commerce; Bureau of Economic Analysis *
School bus average mileage per day	Average school bus mileage per day as reported during that year. The figure reflects the total number of miles traveled by all school buses operated for the year on a per day basis.	S	LINC; NC Department of public instruction
Reports of communicable diseases	The annual number of communicable diseases reported to the Dept. of Health and Human Services.	S	North Carolina Department of Health and Human Services, Division of Health Statistics.
Air Pollution Score	The additive score of pollutants from point sources: Volatile Organic Compounds and Sulfur Dioxide Emissions.	S	LINC; North Carolina Department of Environment & Natural Resources, Division of Air Quality

Table C.1 Continued

Indicator Name and code	Description	Driving Force – State – Response	Source
Levels of fecal coliform bacteria in the Alligator River	Concentration of fecal coliform bacteria in the Alligator River in # per 100 ml.	S	United States Environmental Protection Agency – STORET
Travel expenditures	Estimated total annual average expenditures derived from domestic tourism spending.	R	LINC; North Carolina Department of Commerce.
Economic & physical development expenditures	Expenditures for planning and zoning, economic development, community development, special employment programs and other economic and physical development.	R	LINC; North Carolina Department of State Treasurer
Environmental protection expenditures	Expenditures for garbage & landfills, drainage and watersheds, cemeteries and other protection projects	R	LINC; North Carolina Department of State Treasurer
Human services expenditures	Expenditures for health, mental health, legal aid, subsidies paid to hospitals and other human services. This includes social service administration and assistance programs.	R	LINC; North Carolina Department of State Treasurer
Public safety expenditures	Expenditures for police and emergency communications, emergency management, fire, inspectors, rescue units, animal control and other public safety	R	LINC; North Carolina Department of State Treasurer
Utility expenditures	Expenditures for water and sewer services.	R	LINC; North Carolina Department of State Treasurer

APPENDIX D

Table D.1 Indicators Collected for Study

Name	Source	Description
Labor force by Place of Residence.	LINC; North Carolina Department of Commerce Annual Labor Force and Employment report.	'Labor force' is an estimate of the sum of average annual employed and unemployed persons living in Tyrrell County. The data have been adjusted to exclude commuters and multiple job-holders. From 1984 on, the data represent adjustments based on the 1980 census patterns. From 1986 on the data are presented in unrounded form to allow aggregation of county data. The data prior to 1986 are rounded to the nearest ten. 1995 data on reflect new methodologies for labor force estimates.
Employment by Place of Residence.	LINC; North Carolina Department of Commerce Annual Labor Force and Employment report.	All persons who worked for pay/profit or worked without pay for 15 or more hours per week. 'Employment' includes agriculture, non-agriculture, unpaid family workers, and domestic workers living in Tyrrell County. Place of residence estimates are developed with data secured from places of work employment and adjusted to remove the effects of commuting and multiple jobholding. It is an average of monthly data for the calendar year. From 1986 on the data are presented in unrounded form to allow aggregation of county data. The data prior to 1986 are rounded to the nearest ten. 1995 data on reflect new methodologies for labor force estimates.
Unemployment	LINC; North Carolina Department of Commerce Annual Labor Force and Employment report.	All persons who did not work at all during the measurement period but were able, available for and looking for work. The unemployment variable is an annual average monthly data for the calendar year. From 1986 on the data are presented in unrounded form to allow aggregation of county data. The data prior to 1986 are rounded to the nearest ten. 1995 data on reflect new methodologies for labor force estimates.

Table D.1 Continued

Name	Source	Description
Travel employment	LINC; North Carolina Department of Commerce, Division of Travel	Estimated total employment generated by domestic travel spending at the county level; estimate generated using the Travel Economic Impact Model. Data were imputed from 1980 to 1988.
Travel Payroll	LINC; North Carolina Department of Commerce, Division of Travel	Estimated total payroll generated by domestic travel spending at the county level; estimate generated using the Travel Economic Impact Model. Data were imputed from 1980 to 1988.
Travel expenditures	LINC; North Carolina Department of Commerce, Division of Travel	This variable is a combined variable of travel expenditures estimated between 1980 and 1988 using hotel and motel sales to estimate the value, and between 1989 and 2004 using the Travel Economic Impact Model. 1980-1988 data: total annual average expenditures for the state were estimated using hotel and motel sale. Expenditures were computed by dividing hotel and motel sales by .16 (the percntage of total travel expenditures in the state). Expenditures were allocated to counties based on their shares of hotel and motel sales. Because these data do not account for the factors that the TEIM model does, the values in this variable were added to 1,000,000 to account for the 'missing industries.' 1989-2004 data: estimated total domestic travel spending at the county level by the Travel Economic Impact Model. The estimates represent expenditures made by domestic and international visitors traveling overnight or on day trips to destinations 100 miles or more from home.

Table D.1 Continued

Name	Source	Description
Travel: State Tax Receipts	LINC; North Carolina Department of Commerce, Division of Travel.	Estimated state tax revenue generated by domestic travel spending at the county level; estimate generated using the Travel Economic Impact Model. Data were imputed from 1980 to 1988.
Travel: Local Tax Revenues	LINC; North Carolina Department of Commerce, Division of Travel.	Estimated local tax revenue generated by domestic travel spending at the county level; estimate generated using the Travel Economic Impact Model. Data were imputed from 1980 to 1988.
Property tax revenue	LINC; NC Dept. of State Treasurer	Property tax revenues during the fiscal year. This value includes taxes due for previous years, penalties and interests.
Local option sales tax revenue	LINC; NC Dept. of State Treasurer	Revenues received by the county from the one percent/one-half percent local option sales taxes.
Other tax revenues	LINC; NC Dept. of State Treasurer	Revenues received by the county from the special tax districts of the governmental unit. This includes occupancy taxes, prepared food taxes, licenses, etc).
Permits & fees revenues	LINC; NC Dept. of State Treasurer	Revenues to the county from permits & fees (building permits, inspection fees, register of deeds).
Sales & services revenues	LINC; NC Dept. of State Treasurer	Revenues to the county from sales & services (parking, rents/loyalties, fire protection, garbage & landfill, ambulance & rescue, cemeteries, recreation services, library services).
Utility revenues.	LINC; NC Dept. of State Treasurer	Revenues received by the county for water/sewer charges.
Miscellaneous revenues	LINC; NC Dept. of State Treasurer	Revenues to county from investment earnings, special assessments, private contributions & donations, refunds, sales of materials & fixed assets, sales of real property, ABC distributions).

Table D.1 Continued

Name	Source	Description
Other financing sources.	LINC; NC Dept. of State Treasurer	Proceeds from the sale of bonds & notes, installment & lease purchase agreements & other sources.
Total revenues & other financing	LINC; NC Dept. of State Treasurer	Total of all the county/municipal government's revenues.
General government expenditures	LINC; NC Dept. of State Treasurer	Expenditures by the county for costs (governing body, administration, cost of elections, finance, tax revaluation, legal, public buildings, court facilities, central services, and other general government).
Public safety expenditures	LINC; NC Dept. of State Treasurer	Expenditures for police and emergency communications, emergency management, fire, inspectors, rescue units, animal control and other public safety.
Transportation expenditures	LINC; NC Dept. of State Treasurer	Expenditures by county government for improvements to subdivisions and streets, parking.
Environmental protection expenditures	LINC; NC Dept. of State Treasurer	Expenditures for garbage & landfills, drainage and watersheds, cemeteries and other protection projects.
Economic & physical development expenditures.	LINC; NC Dept. of State Treasurer	Expenditures for planning and zoning, economic development, community development, special employment programs and other economic and physical development. Also includes agriculture extension.

Table D.1 Continued

Name	Source	Description
Human services expenditures	LINC; NC Dept. of State Treasurer	Expenditures for health, mental health, legal aid, subsidies paid to hospitals and other human services. This includes social service administration and assistance programs.
Culture & recreation expenditures	LINC; NC Dept. of State Treasurer	Expenditures for recreation and parks, coliseums, museums, libraries and other culture/recreation projects.
Utility expenditures	LINC; NC Dept. of State Treasurer	Expenditures for water and sewer services.
Debt service expenditures.	LINC; NC Dept. of State Treasurer	Expenditures by county for interest, fees, and principal retired; for water and sewer , schools, community and technical colleges, hospitals and other categories.
Total expenditures	LINC; NC Dept. of State Treasurer	Total of all county or municipal government expenditures
Annual Total Income	United States Bureau of Economic Analysis. http://www.bea.gov/bea/regional/reis/	The total annual income is all income that is earned by all residents from all sources. It is the sum of wage and salary disbursements, supplements to wages, proprietors income, rental income of persons with capital consumption, personal dividend income, personal interest income, and personal transfer receipts, less contributions for government social services.

Table D.1 Continued

Name	Source	Description
Crime Index	LINC; North Carolina Department of Justice.	The total of seven major offenses used to measure the extent, fluctuation, and distribution of crime. Crime classifications presently used in the index are: 1) murder, 2) forcible rape, 3) robbery, 4) aggravated assault, 5) burglary, 6) larceny, and 7) motor vehicle theft.
Percent net migration	LINC; North Carolina Office of the Governor	Net migration represents the difference between two consecutive population totals after accounting for the change due to births and deaths, i.e., natural increase.
Population	LINC; North Carolina Office of the Governor.	Depending on the year, this is the corrected census count (April 1 census year), or the estimate or projection from the State Demographer (April 1 census years, July 1 all other years).
White population	LINC; Bureau of the Census; Census of population & housing	Race is determined by self-identification. Data were estimated by the Census Bureau between census data collection years (1981-1989, 1991-1999, 2001-2003).
Population density	LINC; North Carolina Office of the Governor.	Density represents persons per square mile for the reference area.
Black population	LINC; Bureau of the Census; Census of population & housing	Race is determined by self-identification. Data were estimated by the Census Bureau between census data collection years (1981-1989, 1991-1999, 2001-2003).
Other population	LINC; Bureau of the Census; Census of population & housing	Race is determined by self-identification. Data were estimated by the Census Bureau between census data collection years (1981-1989, 1991-1999, 2001-2003).
Female population	LINC: Bureau of the Census; Census of population & housing	Sum of reported females age 0-4, 5-14, 15, 16-17, 18-20, 21-24, 25-54, 55-64, 65& up. Reported in the 1990 & 2000 Census. Data were imputed between census data collection years (1981-1989, 1991-1999, 2001-2003).

Table D.1 Continued

Name	Source	Description
Male population	LINC: Bureau of the Census; Census of population & housing	Sum of reported males age 0-4, 5-14, 15, 16-17, 18-20, 21-24, 25-54, 55-64, 65& up. Reported in the 1990 & 2000 Census. (1981-1989, 1991-1999, 2001-2003).
Public school final enrollment	LINC; NC department of public instruction	Number of students registered in public schools.
High school dropouts	LINC; NC department of public instruction	Count of all students who drop out of school in grades nine through 12.
Public high school graduates	LINC; LINC; Department of public instruction	Number of students graduating from public high school.
Federal public school expenditures	LINC; NC Department of Public Instruction	Current expense expenditures (in thousands of dollars) for a school year that are connected with the daily operation of all public schools in the state except charter schools and that are spent from the budget of the federal government. Includes child nutrition expenditures.
State public school expenditures	LINC; NC Department of Public Instruction	Current expense expenditures (in thousands of dollars) for a school year that are connected with the daily operation of all public schools in the state except charter schools and that are spent from the budget of state government.
Local public school expenditures	LINC; NC Department of Public Instruction.	Current expense expenditures (in thousands of dollars) for a school year that are connected with the daily operation of all public schools in the state except charter schools.
Primary care physicians.	LINC; The University of North Carolina	Active physicians in general practice, family practice, internal medicine, pediatrics, and OB/GYN licensed by North Carolina Board of Medical Examiners.

Table D.1 Continued

Name	Source	Description
Resident live births.	LINC; North Carolina Department of Health and Human Services	Live births occurring to residents of the area during the calendar year.
Infant deaths.	LINC; North Carolina Department of Health and Human Services.	Defined as death of a live born infant under one year of age.
Low-weight births under 2500 grams	LINC; North Carolina Department of Health and Human Services.	Newborns weighing under 2500 grams at birth regardless of length of gestation as reported on birth certificates for calendar year to mothers who are residents of the county.
Marriages	LINC; North Carolina Department of Health and Human Services.	The number of marriages that occurred in an area during the calendar year.
Divorces	LINC; North Carolina Department of Health and Human Services.	The number of divorces and annulments that occurred in an area.
Males 16 and over in labor force	LINC; Bureau of the Census – Census of population & housing.	Males aged 16 + in the labor force; includes both the employed and unemployed civilians. Data were imputed between census data collection years (1981-1989, 1991-1999, 2001-2003).
Males 16 and over employed	LINC; Bureau of the Census - Census of population & housing	Males aged 16+ who are either "at work" or "with a job but not at work." Includes those who work as paid employees or self-employed. Data were imputed between census data collection years (1981-1989, 1991-1999, 2001-2003).

Table D.1 Continued

Name	Source	Description
Males 16 and over unemployed	LINC; Bureau of the Census - Census of population & housing	Males aged 16+ who are neither "at work" nor " with a job but not at work" who are looking for work and available to accept a job. Data were imputed between census data collection years (1981-1989, 1991-1999, 2001-2003).
Females 16 and over in labor force	LINC; Bureau of the Census – Census of population & housing.	Females aged 16 + in the labor force; includes both the employed and unemployed civilians. Data were imputed between census data collection years (1981-1989, 1991-1999, 2001-2003).
Females 16 and over employed	LINC; Bureau of the Census - Census of population & housing	Females aged 16+ who are either "at work" or "with a job but not at work." Includes those who work as paid employees or self-employed. Data were imputed between census data collection years (1981-1989, 1991-1999, 2001-2003).
Females 16 and over unemployed	LINC; Bureau of the Census - Census of population & housing	Females aged 16+ who are neither "at work" or " with a job but not at work" who are looking for work and avail. to accept a job. Data were imputed between census data collection years (1981-1989, 1991-1999, 2001-2003).
Median Household Income	LINC; Bureau of the Census – Census of population & housing	Household income consists of total money income received in the prior calendar year by all household members 15 years old and over (14 in 1970), tabulated for all households. Median household income figures are derived from the entire distribution of household incomes. Data were imputed between census data collection years (1981-1989, 1991-1999, 2001-2003).

Table D.1 Continued

Name	Source	Description
Households (Families) in poverty	LINC; Bureau of the Census – Census of population and housing.	Families are classified as above or below the poverty level by comparing their total income in the year prior to census date to a "poverty threshold". The income thresholds for poverty vary by family size, number of children, and age of the family householder. Poverty status is determined for all families. Poverty thresholds are computed on a national basis only. Data were imputed between census data collection years (1981-1989, 1991-1999, 2001-2003).
Persons in poverty	LINC; Bureau of the Census – Census of population and housing.	Total number of persons with income below the poverty threshold in the calendar year prior to census dates (1990,2000). Data were imputed between census data collection years (1981-1989, 1991-1999, 2001-2003).
White persons in poverty	LINC; Bureau of the Census – Census of population and housing.	Total number of self-reported white persons below the poverty line in the calendar year prior to the census dates (1990, 2000). Data were imputed between census data collection years (1981-1989, 1991-1999, 2001-2003).
% white persons in poverty	LINC; Bureau of the Census – Census of population and housing.	Percent of white persons in poverty in the calendar year prior to the census. Data were imputed between census data collection years (1981-1989, 1991-1999, 2001-2003).
Black persons in poverty	LINC; Bureau of the Census – Census of population and housing.	Total number of self-reported black persons below the poverty line in the calendar year prior to the census dates (1990, 2000). Data were imputed between census data collection years (1981-1989, 1991-1999, 2001-2003).
% black persons in poverty	LINC; Bureau of the Census – Census of population and housing.	Percent of black persons in poverty in the calendar year prior to the census. Data were imputed between census data collection years (1981-1989, 1991-1999, 2001-2003).

Table D.1 Continued

Name	Source	Description
Work First Recipients	LINC; North Carolina Department of Health and Human Services.	Work First is a program designed to provide employment assistance to parents in the form of occupational training and other services. The program's goal is to provide parents with the opportunities and tools necessary to become financially self-sufficient. Usually lasts 2 years.
Average monthly recipients of food stamps.	LINC; North Carolina Department of Health and Human Services.	Average monthly food stamp recipients for the fiscal year. Eligibility is based on income and resource guidelines published by the USDA. Food stamp coupons are redeemable for food products at most food retail stores.
Energy assistance program	LINC; North Carolina Department of Health and Human Services	Households which were approved cases in the federal Low-Income Home Energy Assistance Block Grant Program during the state fiscal year. This program provides a one-time cash payment to help eligible families pay their heating bills. The amount of assistance depends on the family's income; the type of heating fuel used; the local climate; other fuel subsidies received; and because funds for the program are limited and all eligible families are entitled to participate, the number of eligible applicants.
Unduplicated count of Medicaid eligible.	LINC; North Carolina Department of Health and Human Services.	Those individuals who received a Medicaid ID card that authorizes coverage during the fiscal year.
Social Security Beneficiaries	LINC; North Carolina Department of Health and Human Services.	Total number of Social Security beneficiaries & dependents of old-age, survivors, and disability insurance.

Table D.1 Continued

Name	Source	Description
Children under DSS placement responsibility	LINC; North Carolina Department of Health and Human Services.	Number of children for whom the county's department of social services had placement responsibility at the end of the fiscal year. Includes foster children. Data were imputed for years 1980 to 1988.
Licensed child day-care facilities.	LINC; North Carolina Department of Health and Human Services.	Licensed day care facilities as of December of the reporting year. Includes day care centers and homes serving 6 to 15 children. Data were imputed for years 1980-1984.
Licensed capacity of child day-care facilities	LINC; North Carolina Department of Health and Human Services.	The number of slots in child day care facilities as of December of the reporting year. Includes day care centers and homes serving 6 to 15 children. Data were imputed for years 1980 to 1984.
Average monthly subsidized children in day care.	LINC; North Carolina Department of Health and Human Services.	Average number of children in subsidized day care during the state fiscal year. Data were imputed for years 1980 to 1990.
Persons per household	LINC; Census Bureau, Census of Population and Housing.	Average number of persons per household in the county. Data were imputed between census data collection years (1981-1989, 1991-1999, 2001-2003).
Housing units	LINC; Census Bureau, Census of Population and Housing.	Housing units are defined as houses, apartments, mobile homes/trailers, groups of rooms or single room occupied as a separate living quarter or intended for occupancy as a separate living quarter. This number includes both vacant and occupied units. Data were imputed between census data collection years (1981-1989, 1991-1999, 2001-2003).

Table D.1 Continued

Name	Source	Description
Seasonal housing units	LINC; Census Bureau, Census of Population and Housing.	Units used or intended for use only in certain seasons. Data were imputed between census data collection years (1981-1989, 1991-1999, 2001-2003).
Vacant housing units	LINC; Census Bureau, Census of Population and Housing.	Housing units are considered vacant if no one is living in them during census accounting. Vacant housing units includes seasonal housing units. Data were imputed between census data collection years (1981-1989, 1991-1999, 2001-2003).
Owner occupied housing units	LINC; Census Bureau, Census of Population and Housing	Those in which the owner or co-owner lives in the unit even if the unit is mortgaged or not fully paid for. The owner or co-owner need not be the householder. Data were imputed between census data collection years (1981-1989, 1991-1999, 2001-2003).
Renter occupied housing units.	LINC; Bureau of Census, Census of Population & Housing	Renter-occupied housing units are occupied housing units which are not owner-occupied, regardless of whether cash rent is paid by a member of the household. Data were imputed between census data collection years (1981-1989, 1991-1999, 2001-2003).
Mobile homes or trailers.	LINC; Bureau of Census, Census of Population & Housing	Both occupied and vacant mobile homes are included if intended for occupancy where located in 1980, 1990, and 2000. (For 1970, vacant mobile homes were excluded.) Excluded are mobile homes to which permanent rooms have been added, mobile homes used only for business purposes or for extra sleeping space, and mobile homes for sale on a dealer's lot. Data were imputed between census data collection years (1981-1989, 1991-1999, 2001-2003).

Table D.1 Continued

Name	Source	Description
Noncommuters/Workers in county of residence.	LINC; Bureau of Census, Census of Population & Housing	Those workers who do not leave their county of residence to work. Data were imputed between census data collection years (1981-1989, 1991-1999, 2001-2003).
Workers residing outside county (commeters/work out of county).	LINC; Bureau of Census, Census of Population & Housing	These are counts of workers who commute to work into this county from another county. Data were imputed between census data collection years (1981-1989, 1991-1999, 2001-2003).
Workers outside county of residence.	LINC; Bureau of Census, Census of Population & Housing	Those workers who traveled outside their county of residence to work. Data were imputed between census data collection years (1981-1989, 1991-1999, 2001-2003).
School bus average mileage per day.	LINC; NC Department of public instruction	Average school bus mileage per day as reported during that year. The figure reflects the total number of miles traveled by all school buses operated for the year on a per day basis.
Payments to non-profit organizations	LINC; Bureau of economic analysis. Transfer payments.	This total represents estimates for transfer payments to nonprofit institutions.
Registered voters	LINC; State Board of Elections	Reflects the total number of voter registrations as reported by county boards of election to the State Board of Elections as of Oct. of the reference year.
White registered voters	LINC; State Board of Elections	Reflects the total number of registered voters of white race as reported by county boards of election to the State Board of Elections as of Oct. of the reference year.

Table D.1 Continued

Name	Source	Description
Black registered voters	LINC; State Board of Elections	Reflects the total number of registered voters of black race as reported by county boards of election to the State Board of Elections as of Oct. of the reference year.
Other registered voters	LINC; State Board of Elections	Reflects the total number of registered voters of race other than black or white as reported by county boards of election to the State Board of Elections as of Oct. of the reference year.
Auto & truck registrations	LINC; North Carolina Department of Transportation	Actual registrations for automobiles and trucks, by county in which the vehicles were registered for the calendar year. This data is a summary by county completed in mid-December and represents the number of valid auto & truck registration at that time.
Palmetto-Peartree Preserve Traffic Count	North Carolina Department of Transportation, GIS & Mapping Unit	Average daily traffic count at Pot Licker Road (State Route 1220).
Total water use (Millions of gallons/Day).	LINC; NC Dept. of Environment and Natural Resources.	Average annual rate of withdrawal of fresh and salt water from surface and ground water sources for all uses by county in millions of gallons per day. Because records are kept on a five-year basis, data were imputed for the years 1980-1984, 1986-1989, 1991-1994, 1996-1999, and 2001-2003.

Table D.1 Continued

Name	Source	Description
Water use for thermoelectric power generation	LINC; NC Dept. of Environment and Natural Resources.	Average annual rate of withdrawal of fresh and salt water from surface and ground water sources for thermoelectric power generation uses, primarily for condenser cooling, by county in millions of gallons per day (Mgal/d or MGD). Includes consumptive use and return(ed) flow. Does not include instream uses such as hydroelectric power generation. Because records are kept on a five-year basis, data were imputed for the years 1980-1984, 1986-1989, 1991-1994, 1996-1999, and 2001-2003.
Domestic water use from individual wells.	LINC; NC Dept. of Environment and Natural Resources.	Average annual rate of withdrawal of fresh water by individual wells for domestic uses by county in millions of gallons per day (Mgal/d or MGD). Derived from estimates. Because records are kept on a five-year basis, data were imputed for the years 1980-1984, 1986-1989, 1991-1994, 1996-1999, and 2001-2003.
Water use by livestock	LINC; NC Dept. of Environment and Natural Resources.	Average annual rate of withdrawal of fresh water from surface and ground water sources for watering livestock by county in millions of gallons per day (Mgal/d or MGD). Derived from estimates. Because records are kept on a five-year basis, data were imputed for the years 1980-1984, 1986-1989, 1991-1994, 1996-1999, and 2001-2003.
Hazardous waste generated	LINC; NC Dept. of Environment and Natural Resources.	Data derived from companies generating 1,000 kilograms (2200 pounds) of hazardous waste in any one given month of a calendar year.

Table D.1 Continued

Name	Source	Description
Particulate emissions from point sources (tons).	LINC; NC Dept. of Environment and Natural Resources.	Particulate matter may be described based upon particle size. The emissions standards are based upon a more health sensitive size of particles, "PM-10," which is the total for those particles less than 10 micrometers in aerodynamic particle size. a major point source as "any facility that actually emits a total of 907 metric tons (1000 tons) or more per year of the pollutant carbon monoxide or a total of 90.7 metric tons (100 tons) or more per year of any one of the pollutants particulates, sulfur dioxide, hydrocarbons, and nitrogen oxides,
Sulfer Dioxide emissions from point sources.	LINC; NC Dept. of Environment and Natural Resources.	Formed from the combustion of sulfur in the air (from coal or other fuels. Total represents the total tons of SO2 emissions from all county point sources.
Nitrogen oxide emissions from point sources.	LINC; NC Dept. of Environment and Natural Resources.	Associated with the combustion of fuels in boilers & motor vehicles. Totals represent total tons of nitrogen oxide emissions from all county point sources.
Volatile organic compound emissions from point sources (VOCs)	LINC; NC Dept. of Environment and Natural Resources.	Represents VOC emissions in tons per year. VOCs form ozone.
Carbon monoxide emissions from point sources.	LINC; NC Dept. of Environment and Natural Resources.	CO is associated with the combustion of carbon based fuels in boilers and internal combustion engines.
Paved Highway Mileage	LINC; North Carolina Department of Transportation	Total paved mileage of primary and secondary roads as of December 31. This number excludes unnumbered roads.

Table D.1 Continued

Name	Source	Description
Average Vegetation Growth	United States Geological Survey Center for Earth Resources Observation and Science (Advanced Very High Resolution Radiometer).	Normalized Difference Vegetation Index (Average Greenness) data calculated for Tyrrell County. Used GIS (ArcMap) analysis to determine greenness of county. Ground resolution is 1.1 by 1.1 kilometers.
Alligator River Water Quality – Dissolved Oxygen	United States Environmental Protection Agency – STORET. http://www.epa.gov/storet/index.html	Dissolved oxygen concentrations in milligrams per liter. Amount of dissolved oxygen in water enables aerobic life to exist. Levels below 5 mg/L indicate poor water quality. Data prior to 1983 was imputed.
Alligator River Water Quality – Turbidity Level	United States Environmental Protection Agency – STORET. http://www.epa.gov/storet/index.html	Turbidity level of water measured in NTUs (Nephelometric Turbidity Units). Turbidity is a measure of water clarity and can indicate poor drinking water quality. Data prior to 1983 was imputed.
Alligator River Water Quality – Fecal Coliform Bacteria	United States Environmental Protection Agency – STORET http://www.epa.gov/storet/index.html	Concentration of fecal coliform bacteria in the Alligator River in # per 100 ml. The presence of this contaminant indicates a potential health risk for individuals exposed to the water. Data prior to 1983 was imputed.
Reported communicable diseases in Tyrrell County	North Carolina State Department of Health, Communicable Disease Control http://www.epi.state.nc.us/epi/gcdc.html	Communicable diseases reported in Tyrrell County between 2000 and 2004. 1980 to 1999 had to be imputed.
Reported number of residents in Tyrrell County receiving drug and alcohol abuse treatment in state hospitals	LINC; Department of Health and Human Services, Division of Mental Health.	Reflects the total number of persons who were active at the start of the fiscal year. Excludes visiting patients and outpatients.

Table D.1 Continued

Name	Source	Description
Total solid waste collected (Tons)	North Carolina Division of Waste Management	Total waste disposed of by county. The baseline year of data collection was FY1991-1992. Data were imputed for missing years 1980-1990, 1995/1995/