US006492241B1

(12) **United States Patent**
Rhodes et al.

(10) **Patent No.: US 6,492,241 B1**
(45) **Date of Patent: Dec. 10, 2002**

(54) **INTEGRATED CAPACITORS FABRICATED WITH CONDUCTIVE METAL OXIDES**

(75) Inventors: **Howard E. Rhodes**, Boise, ID (US); **Mark Visokay**, Boise, ID (US); **Tom Graettinger**, Boise, ID (US); **Dan Gealy**, Kuna, ID (US); **Gurtej Sandhu**, Boise, ID (US); **Cem Basceri**, Boise, ID (US); **Steve Cummings**, Boise, ID (US)

(73) Assignee: **Micron Technology, Inc.**, Boise, ID (US)

(*) Notice: Subject to any disclaimer, the term of this patent is extended or adjusted under 35 U.S.C. 154(b) by 0 days.

(21) Appl. No.: **09/546,492**

(22) Filed: **Apr. 10, 2000**

(51) **Int. Cl.**[7] **H01L 29/72**

(52) **U.S. Cl.** **438/386**; 438/210; 438/387; 438/389; 438/391; 438/399; 438/692; 438/759; 257/296; 257/298; 257/300; 257/532

(58) **Field of Search** 257/288, 296, 257/298, 300, 532; 438/210, 386, 387, 389, 391, 399, 692, 759

(56) **References Cited**

U.S. PATENT DOCUMENTS

5,504,041 A 4/1996 Summerfelt
5,576,928 A 11/1996 Summerfelt et al.
5,619,393 A 4/1997 Summerfelt et al.
5,622,893 A 4/1997 Summerfelt et al.
5,729,054 A 3/1998 Summerfelt et al.
6,218,233 B1 * 4/2001 Takemura 257/288

OTHER PUBLICATIONS

Aoyama, T. Murakoshi, A., Imai, K, Ru Electrode Deposited by Sputtering in Ar/O_2 Mixture Ambient "*Japanese Journal of Applied*" Physics, Part 1, vol. 37, 10, p. 5701–7.

Aoyama, T. et al., Interfacial Layers between Si and Ru Films Deposited by Sputtering in Ar/O_2 Mixture Ambient "*Japanese Journal of Applied*" Physics, Part 2, vol. 37, 2B, p. L242–4.

* cited by examiner

Primary Examiner—Edward Wojciechowicz
(74) *Attorney, Agent, or Firm*—Knobbe, Martens, Olson & Bear, LLP

(57) **ABSTRACT**

A capacitor for a memory device is formed with a conductive oxide for a bottom electrode. The conductive oxide (RuO_x) is deposited under low temperatures as an amorphous film. As a result, the film is conformally deposited over a three dimensional, folding structure. Furthermore, a subsequent polishing step is easily performed on the amorphous film, increasing wafer throughput. After deposition and polishing, the film is crystallized in a non-oxidizing ambient.
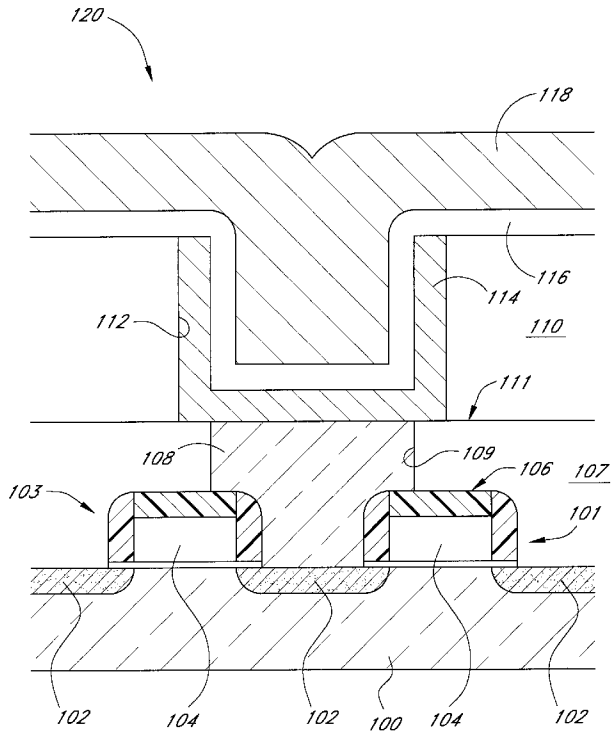
32 Claims, 7 Drawing Sheets