US005324016A

United States Patent [19]

Beasock et al.

[11] Patent Number: 5,324,016

[45] Date of Patent: Jun. 28, 1994

[54] SELF-ADJUSTING FABRIC PLY PICKING DEVICE

[75] Inventors: **Robert J. Beasock**, Rome; **Hadi M. N. Hamid**, New Hartford, both of N.Y.; **Timothy G. Clapp**, New Hill, N.C.

[73] Assignee: **Fruit of the Loom**, Bowling Green, Ky.

[21] Appl. No.: **120,566**

[22] Filed: **Sep. 13, 1993**

[51] **Int. Cl.**[5] **B65H 5/00**

[52] **U.S. Cl.** **271/10**; 271/21; 271/18.3

[58] **Field of Search** 271/10, 18.3, 19, 21, 271/16; 414/796.9

[56] **References Cited**

U.S. PATENT DOCUMENTS

Re. 30,084	9/1979	Morton	271/18.3 X
234,469	11/1880	Griffith et al. .	
492,218	2/1893	Lux .	
747,865	12/1903	Dexter et al. .	
2,042,734	6/1936	Roy	271/21
3,031,187	4/1962	Sano et al.	271/19
3,253,824	5/1966	Southwell et al.	271/19
3,353,821	11/1967	Smith et al.	271/16
3,442,505	12/1966	Szentkuti	271/1
3,583,695	6/1971	Sherwood	271/21
3,940,125	2/1976	Morton	271/10
4,019,729	4/1977	Morton	271/18.3
4,157,825	6/1979	Ellenberger et al.	271/10
4,482,144	11/1984	Glassby	271/21
5,180,155	1/1993	Asai	271/21
5,181,708	1/1993	Ruch	271/21

Primary Examiner—D. Glenn Dayoan
Assistant Examiner—Carol L. Druzbick
Attorney, Agent, or Firm—Schweitzer Cornman & Gross

[57] **ABSTRACT**

There is disclosed an improved fabric picking device having a circumferentially toothed picking wheel carried at one end by an elongated inner frame, a shoe adjacent thereto carried by an outer frame, the inner and outer frames being hingedly connected for limited relative movement at their ends opposite the wheel and shoe, of the wheel being responsive independently to controlled spring pressure such that the gap for receiving and pinching fabric between wheel and shoe is rendered self-adjusting for an infinitely variable range of fabric thickness.
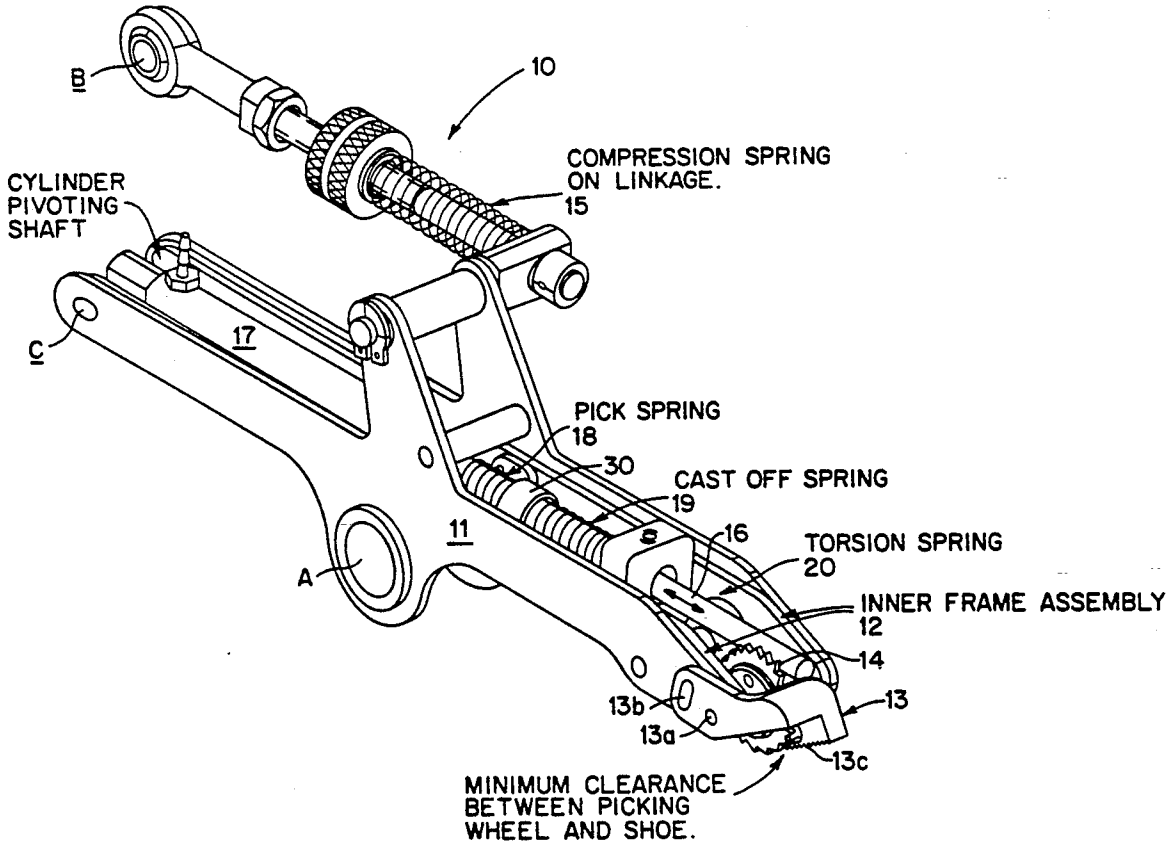
6 Claims, 3 Drawing Sheets