18th International Conference on Structural Mechanics in Reactor Technology (SMiRT 18)
Beijing, China, August 7-12, 2005
SMiRT18-J09-6

A NOVEL BANDAGE RING FOR HIGH SPEED GENERATOR

Zhuo Sun*, Guojun Yang, Shixin Zhou
Institute of nuclear and new energy technology
Tsinghua University, Beijing, 100084, China
sunzhuo@tsinghua.edu.cn

ABSTRACT: A novel bandage ring which is made of composite material and metal material is proposed for high speed generator. The novel bandage ring has a metal lining inside and a composite material reinforcing layer outside. The size of metal lining which is made of titanium in this paper can be machined accurately to meet the assembling requirement, and the composite material layer reinforces the bandage ring because of its low density and high strength. So the novel bandage ring is lighter and stronger than traditional metal bandage rings. Theoretical calculation proves that both carbon fiber/epoxy resin and Apmoc/epoxy resin composite have enough strength when the rotation speed of generator is 18,000r/min.
Keywords: generator, bandage ring, composite material

1 INTRODUCTION

Bandage rings are the components to fix and protect the winding overhang of rotor, and they bear the most stress in electric motor. Generally the rotational speed of electric motor is less than 3,000r/min, and the bandage rings are made of metal material, such as alloyed steel, titanium and so on. Such metal materials have enough strength to protect the winding overhang at this time.

In the project HTR-10GT of Tsinghua University, the generator is 2,000kW and its nominal speed is 15,000r/min. The speed will reach 18,000r/min in overspeed experiment. The centrifugal forces of bandage rings and wingding overhang will increase greatly, so the main difficulty of designing generator is the strength of bandage rings. According to the preliminary design [1], the diameter of bandage rings is 316mm, and none of metal material has enough strength under the peculiar speed condition.

As the improving of material science, many high strength, high modulus and low density non-metal materials are developed. They are used in aerospace field widely. But the generator manufacturers have little experience in using non-metal structural material, so metal material is the only material for bandage ring.

In this paper, a novel bandage ring which is made of non-metal materials is introduced. Then the feasibility is analyzed through the temperature and mechanics characteristics of the non-metal materials. The simulation results prove the feasibility.

2 CHARACTERISTICS OF NEW NON-METAL COMPOSITE

Polymeric matrix composite has low density and high strength, so it is widely used in aerospace vehicles. The common matrix material is epoxy resin, and the common reinforcing materials are glass fiber, aramid fiber, and carbon fiber.

2.1 Glass fiber

The mechanical properties of glass fiber are shown in table 1:

Table 1 Mechanical properties of glass fiber [2]

Trademark	Tensile strength (MPa)	Young's modulus (GPa)	Elongation at break (%)	Density (g/cm^3)
E－Glass Fiber	3170	72.5	4.8(22.2˚C)	2.55
S－Glass Fiber	4130	82.7	－	2.50
S－2 Glass Fiber	4585(21˚C)	86.9	5.4(22.2˚C)	2.46
C－Glass Fiber	3033	69.0	4.8(22.2˚C)	2.49

2.2 Aramid fiber composite

The mechanical properties of polymer fiber are shown in table 2:

Table 2 Mechanical properties of aramid fiber [2,3]

Material	Manufacturer	Tensile strength (MPa)	Young's modulus (GPa)	Elongation at break (%)	Density (g/cm^3)
Армос Ⅰ－Λ	Russia	4141 (4590)	142.2 (127)	3.2 (4.0)	1.450 (1.449)
Армос Ⅱ－б	Russia	4120 －	137.3	－	1.450
Армос Ⅲ－ΛMK	Russia	4903 (5060)	142.2 (148)	3.2 (3.7)	1.450 (1.449)
CBM5	Russia	3920 (3770)	127 (101)	3.1 (3.5)	1.450 (1.449)
CBM6	Russia	4120 －	132 －	－	1450
Kevlar-49	USA	3620~3700	125~127	2.50	1.44~1.45
Kevlar-149	USA	2833	165	1.30	1.45
Kevlar-149(HM)	USA	3500	180	1.8~1.9	1.47

Kevlar-68	USA	2900	100	3.15	1.44
Twaron	Holland	3000	125	2.30	1.45
Aramid 1414	China	3000	100	2.70	1.44

In table 2, the data in brackets are the measured results and the other data are offered by manufacturers.

The characteristics of aramid fiber /epoxy resin composite material are:

Tensile strength: 1.9～2.3GPa；

Young's modulus: 85～100GPa；

Coefficient of thermal expansion: $-1.5\times10^{-6}\ \frac{1}{°C}$；

Density: ≈1.4g/cm^3；

Coefficient of thermal conductivity: 0.1~0.6W/(m·K)。

2.3 Carbon fiber composite

The mechanical properties of carbon fiber are shown in table 3:

Table 3 Mechanical properties of carbon fiber [3]

Trademark	Manufacturer	Tensile strength (MPa)	Young's modulus (GPa)	Elongation at break (%)	Density /(g/cm^3)
G40-700	—	4826	290	1.56	1.73
G40-700	—	4964	300	1.66	1.77
Magnamite AS-6	USA(Hexcules)	4140	242	1.65	1.83
Magnamite IM-6	USA (Hexcules)	4382	276	1.50	1.73
Magnamite IM-7	USA (Hexcules)	4713	283	1.60	1.78
Magnamite IM-8	USA (Hexcules)	5172	310	1.66	1.80
Magnamite UHM	USA (Hexcules)	3792	441	0.80	1.88
Magnamite HMU	USA (Hexcules)	2760	380	0.70	1.84
Frotafil 3(C)	Germany (AKZO)	3800	227	1.70	1.80
Frotafil 3(C)	Germany (AKZO)	2760	345	0.80	1.80
Rovi Lon A4.25	Russia (Kaiser-Niignafil)	3800	220	1.20	1.73
Rovi Lon A8.5	Russia (Kaiser-Niignafil)	3800	220	1.20	1.73

The characteristics of carbon fiber /epoxy resin composite material are:

Tensile strength: ≥2.45GPa；

Young's modulus: ≥190GPa；

elongation at break: ≥1.2%；

Density: ≥1.75g/cm^3；

Coefficient of thermal expansion: -0.8×10^{-6} $\frac{1}{°C}$。

2.4 Comparison of different materials

The mechanical properties of some common materials are shown in table 4.

Table 4 Mechanical properties of some common materials [4]

Material	Density (g/cm^3)	Tensile strength (GPa)	Young's modulus (GPa)	Poisson's ratio
Steel	7.8	1.010	206	0.3
Aluminum	2.8	0.461	74	
Titanium	4.5	0.942	112	0.3
Glass reinforced plastics	2.0	1.040	39	-
Carbon fiber/epoxy resin composite	≥1.75	≥2.45	≥190	0.35
Армос/ epoxy resin composite	1.45	1.9～2.3	85～100	0.35
Kevlar/ epoxy resin composite	1.4	1.373	78	0.35
Boron fiber/ epoxy resin composite	2.1	1.344	206	-
Boron fiber / aluminum composite	2.65	0.981	196	-

Table 1~4 show that the mechanical properties of carbon fiber/epoxy resin composite and Армос/epoxy resin composite are better than other materials, so they are widely used in aerospace field.

3 NOVEL BANDAGE RING

The structure of the novel bandage ring is shown in fig.1.

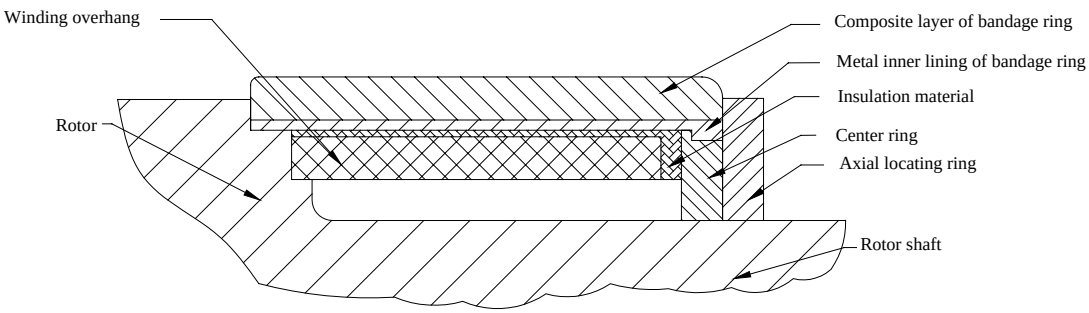

Fig.1 Constructional drawing of novel bandage ring

The novel bandage ring shown in fig.1 has two layers: a composite layer outside and a metal inner lining inside. The composite layer could be carbon fiber/epoxy resin or Армос/epoxy resin composite. The metal inner lining could be alloyed steel or titanium. The composite layer has low density and high strength, it protects the wingding overhang. The functions of metal inner lining are:

(1) It is the frame for composite prepreg to solidify. So the rotor and bandage ring could be manufactured and detected separately.

(2) It could reinforce the axial strength of composite layer.

(3) Exact mating surfaces could be machined on the metal lining because of its good machine tooled property.

4 STRENGTH ANALYSIS

According to reference [1], the dimensions of bandage ring are shown in table 5.

Table 5 Dimensions of bandage ring

Parameters	Values
Length, mm	235
External diameter, mm	314
Internal diameter, mm	260
Average design thickness, mm	25
Radial section area, mm^2	5560
Gravity center diameter, mm	288
Overhang mass, kg	45
Overhang diameter, mm	225

It is convenient for calculation to simplify the bandage ring in fig.1. The simplified bandage ring is shown in fig.2.

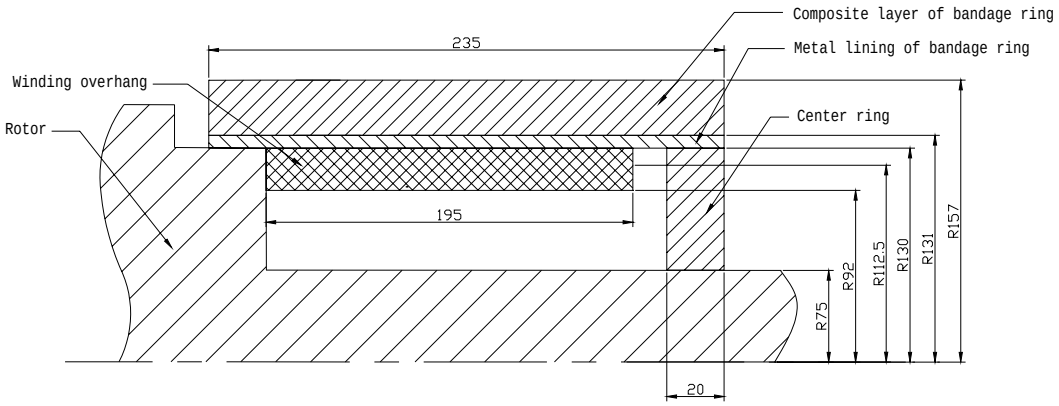

Fig.2 Simplified bandage ring

The composite layer of bandage ring is made of Apmoc/epoxy resin composite or carbon fiber/epoxy resin composite, and the metal lining is made of titanium. Their parameters of mechanical properties are shown in table 4, and the dimensions of bandage ring are shown in fig.2.

Assuming the winding overhang is a cylinder and the rotation speed is 18,000 r/min, the cylinder calculation

model is shown in fig.3.

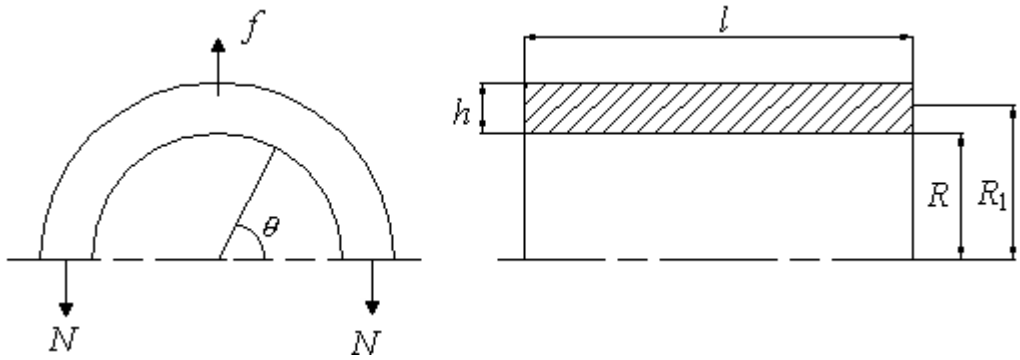

Fig.3 Cylinder calculation model

In fig.3, f is centrifugal force, R_1 is gravity center radius.

The centrifugal force of winding overhang is:

$$f_{\mathrm{W}} = m\omega^2 R_1 = 22.5\times(2\pi\times300)^2\times0.1125 = 8.98\times10^6\ \mathrm{N}$$

The centrifugal force of titanium metal lining is:

$$f_{\mathrm{Ti}} = \pi\rho Rlh\omega^2 R_1 = 2\times10^5\ \mathrm{N}$$

If the composite layer of bandage ring is made of carbon fiber/epoxy resin composite, the centrifugal force of composite layer is:

$$f_{\mathrm{Carbon}} = \pi\rho Rlh\omega^2 R_1 = 2.16\times10^6\ \mathrm{N}$$

If the composite layer of bandage ring is made of Apmoc/epoxy resin composite, the centrifugal force of composite layer is:

$$f_{\mathrm{Apmoc}} = \pi\rho Rlh\omega^2 R_1 = 1.79\times10^6\ \mathrm{N}$$

The centrifugal force of bandage ring is:

$$\sum f_{\mathrm{BCarbon}} = f_{\mathrm{W}} + f_{\mathrm{Ti}} + f_{\mathrm{Carbon}} = 11.34\times10^6\ \mathrm{N}$$

$$\sum f_{\mathrm{BApmoc}} = f_{\mathrm{W}} + f_{\mathrm{Ti}} + f_{\mathrm{Apmoc}} = 10.97\times10^6\ \mathrm{N}$$

The tensile stress in bandage ring is:

$$\sigma_{\mathrm{BCarbon}} = 11.34\times10^6/(2\times0.235\times0.025)$$

$$=0.965\mathrm{GPa}<[\sigma_{\mathrm{BCarbon}}]=2.45\mathrm{GPa}$$

$$\sigma_{\mathrm{BApmoc}} = 10.97\times10^6/(2\times0.235\times0.025)$$

$$=0.934\mathrm{GPa}<[\sigma_{\mathrm{BApmoc}}]=2\mathrm{GPa}$$

Thus the displacement of bandage ring is:

$$v_{\mathrm{BCarbon}} = \sigma_{\mathrm{BCarbon}} R_1 / E_{\mathrm{Carbon}} = 0.965 \times 0.144/190 = 0.7314\mathrm{mm}$$

$$v_{\mathrm{BApmoc}} = \sigma_{\mathrm{BApmoc}} R_1 / E_{\mathrm{Apmoc}} = 0.934 \times 0.144/90 = 1.4944\mathrm{mm}$$

All the results are shown in table 6.

Table 6 Results of strength analysis

Composite layer of bandage ring	tensile stress, σ (Gpa)	ultimate strength, $[\sigma]$ (Gpa)	Displacement (mm)
carbon fiber/epoxy resin	0.965	2.45	0.7314
Apmoc/epoxy resin	0.934	2	1.4944

5 CONCLUSION

Novel bandage ring has two layers: a composite layer outside and a metal inner lining inside. The results of theoretical calculation prove that both carbon fiber/epoxy resin and Apmoc/epoxy resin composite have enough strength to protect winding overhang when the rotation speed of generator is 18,000r/min. The mechanical properties of carbon fiber/epoxy resin composite are better than the Армос/epoxy resin composite's.

REFERENCES

[1] State Unitary Enterprise I.I. Afrikantov Experimental Design Bureau of Mechanical Engineering (OKBM). Power Conversion Unit Design Specification-Part 4-GENERATOR.

[2] Zhang Yulong. Manual of advanced composite manufacturing engineering. China machine press. 2003

[3] Lin Dechong. New evolution of advanced composite applied in aerospace field. Proceedings of the 8th China composite material conference. 1994:1~8

[4] Xiao Changfa. Fibrous composite. China petrochemical press. 1995

