Transactions, SMiRT-22
San Francisco, California, USA - August 18-23, 2013
Division IX (include assigned division number from I to X)

A STATISTICAL AND FINITE ELEMENT MODELLING APPROACH USED IN THE DERIVATION OF MODERATOR GRAPHITE BEHAVIOUR

M Fahad[1], G Hall[1], K McNally[2], B J Marsden[1], P Mummery[1], and N Warren[2]

[1]Nuclear Graphite Research Group, School of MACE, The University of Manchester, Manchester, England M13 9PL
[2]Statistical Modelling Team, Mathematical Sciences Unit, Health and Safety Laboratory, Harpur Hill, Buxton, England SK17 9JN

ABSTRACT

In Advanced Gas-cooled Reactors, fast neutron irradiation and radiolytic oxidation cause complex dimensional and material properties changes in the graphite moderator bricks. These changes, primarily dimensional change and irradiation creep, have an effect on the internal stresses produced in the graphite bricks that could lead to cracking. Stresses in the moderator brick can be predicted using the finite element method in combination with constitutive equations derived from experimental data. Although much data are available for changes in an inert environment, there is a lack of data for changes due to combined fast neutron irradiation and radiolytic oxidation. This paper presents a combined finite element and statistical modelling approach to determine the behaviour of graphite in an irradiation and oxidizing environment from reactor inspection data.

KEYWORDS

Nuclear Graphite, Fast Neutron Irradiation, Radiolytic Oxidation, Finite Element Modelling, Bayesian emulator.

INTRODUCTION

Nuclear graphite in an Advanced Gas Cooled Reactor (AGR) acts as a moderator and forms channels for fuel and control rods and channels for coolant. Thus, it is important that the graphite moderator bricks retain their structural integrity. Fast neutron irradiation causes complex dimensional and material properties changes in the graphite moderator bricks. According to Kelly (1982) all of the graphite properties will change when it is in a reactor. Furthermore, fast neutron irradiation causes dimensional changes which lead to a buildup of internal stresses within the brick. Nuclear graphite also undergoes "irradiation creep" (Chang, 1974), which relieves the internal stresses to some extent. However, the stresses can still build up and the structural integrity of the bricks may eventually be compromised.

Many studies have been conducted to study the behaviour of nuclear graphite under fast neutron irradiation. Most of the reactors in operation in UK are carbon dioxide cooled including the AGRs. Although, there are advantages of using carbon dioxide as a coolant including ease in the variation of the density of the coolant and independence of phase change of the gas on reactor operating conditions (Tsang and Marsden, 2006), the graphite undergoes radiolytic oxidation in addition to the fast neutron irradiation. The radiolytic oxidation leads to weight loss and develops further internal porosity which significantly reduces the strength (Neighbour, 2001).

The data used for the prediction of stresses and dimensional changes in nuclear graphite under irradiation are mostly available from inert environment experiments conducted in Materials Test Reactor (MTR) programmes. Data are also obtained from graphite samples periodically trepanned from AGR fuel

channels. However, there are limited data available for dimensional changes and irradiation creep under a combined effect of an irradiating and oxidising environment and to fluences that are applicable to the AGR. The measurement of the brick shape changes are being carried out at regular intervals during the reactor outage using a device called Channel Bore Measurement Unit (CBMU).

The Finite Element Analysis (FEA) of graphite components in a reactor are normally carried out using empirical relationships derived from MTR data and tuned to trepanned data. The predicted stresses can be compared with the strength data from MTR programs and trepanning campaigns to give an indication of the likelihood of cracking. Current analyses predict that the moderator bricks should not be cracking although cracks have been observed in operating AGRs. One possible explanation for this discrepancy is that the predicted stresses are incorrect due to the uncertainties in the modelling of dimensional change and irradiation creep in a combined fast neutron irradiation and radiolytic oxidation environment. At present the predicted stresses cannot be validated against the actual stresses in the moderator bricks. However, a large amount of reactor data in the form of CBMU data does exist and may lend itself to the validation or improvement of component behaviour.

The UK's Office for Nuclear Regulation established the AGR Brick Cracking Network (AGR BCN) with the aim of investigating the cracking phenomenon and improving our understanding of the causes. The AGR BCN consists of the Health and Safety Laboratory (HSL), the University of Birmingham (UoB) and the University of Manchester (UoM). This paper presents a combined effort of HSL and UoM to devise a methodology that can be used to improve the Finite Element Modeling (FEM) assessments for irradiated and oxidized graphite. This is carried out through a calibration of FE models to experimental and CBMU measurements, using a statistical emulator. The model could reduce the uncertainties in the prediction of future behaviour and ultimately assist in understanding the cracking observed in AGR graphite components. The proposed modelling strategy will incorporate the use of FEA with the empirical relationships.

METHODOLOGY

Figure 1 shows a methodology combining FEM and Statistical Modelling (SM) to estimate improved parameters in Finite Element (FE) models for irradiated and oxidized graphite through a calibration of FE models to CBMU measurements, using a Bayesian emulator. Each step is discussed under their headings in the paper.

The first phase of this methodology identifies a measurement or metric that is sensitive to the material property under investigation. For example, in the case of dimensional change, the graphite moderator brick bore mid-height average diameter was used. This metric can be found by conducting sensitivity analyses using the FE models. A design matrix listing the parameter inputs (design points) for the FEM is built using the identified parameters and the FE models analysed using the design points as an input. The predicted metric for each design point is then outputted and used as an input to the emulator. The emulator is then built and calibrated against the available experimental or inspection data. The calibrated parameters from the emulator can be used to reanalyse the FE model and to create the underlying properties and other parameters change curves.

dsd

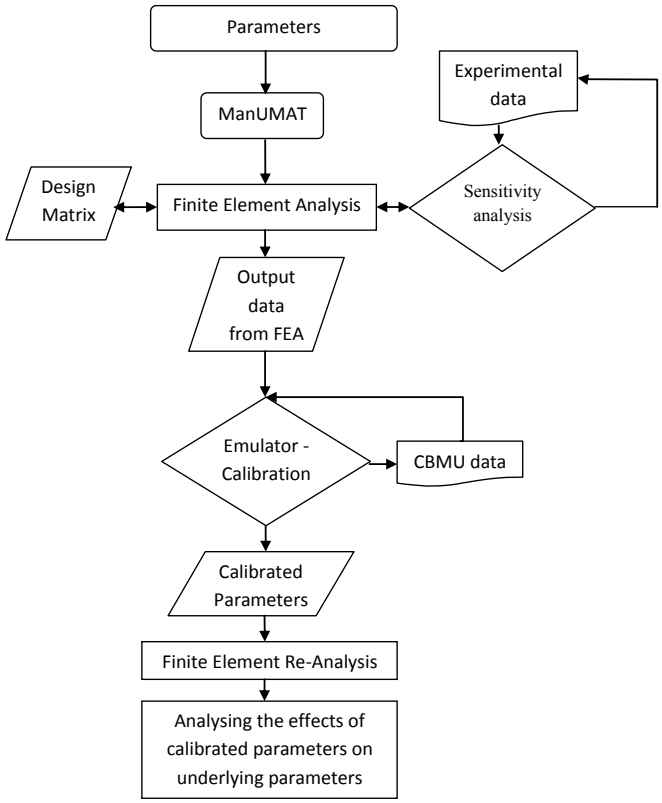

Figure 1. Methodology for the calibration of parameters

FINITE ELEMENT MODELING

Mesh and modeling technique

In the current paper, a commercially available FE package, Abaqus Standard 6.12-1 was used to model the nuclear graphite brick. Due to the symmetry in the geometry of the brick [Figure 2 (a)] only an octant of the brick cross-section along the full axial height was modelled [Figure 2 (b)]. A 3D stress, 20 node, quadratic brick element (C3D20R) was used with reduced integration for the graphite brick. Nuclear graphite is subjected to neutron irradiation and radiolytic oxidation during the reactor operation, and these effect the dimensional and material properties changes. A user defined material subroutine (UMAT) was used to include the constitutive relationships reflecting the above mentioned effects. The user subroutine (ManUMAT) was developed previously under a combined research project between the UoM and, (Tsang and Marsden 2008) [Eason et al. (2006 & 2008)]. Work is continuously being conducted by both UoM and Modelling and Computing Services to obtain new fluence-weight loss-dependent property curves by re-examining the Gilsocarbon materials properties data using pattern recognition and analysis tools. The other properties relationships in the ManUMAT were based upon the models and constitutive relationships derived previously by British Energy (2003).

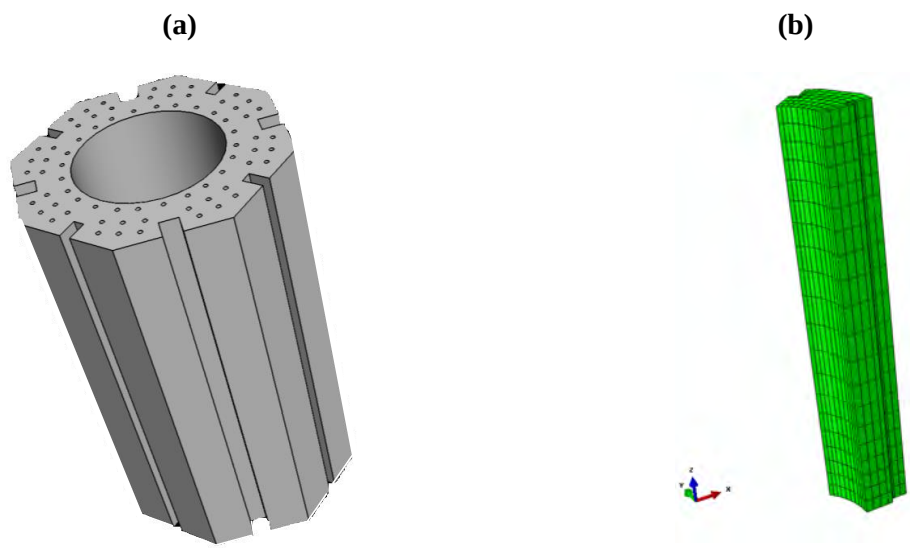

Figure 2. Geometrical model (a) and FE meshed octant model (b) of an AGR nuclear graphite brick.

Loadings

In the finite element analyses, the temporal and spatial distributions of the loads for the brick were used in the form of field variables that describe the distributions of fast neutron fluence, irradiation temperature, and weight loss. Examples of the field variables are shown in Figure 3.

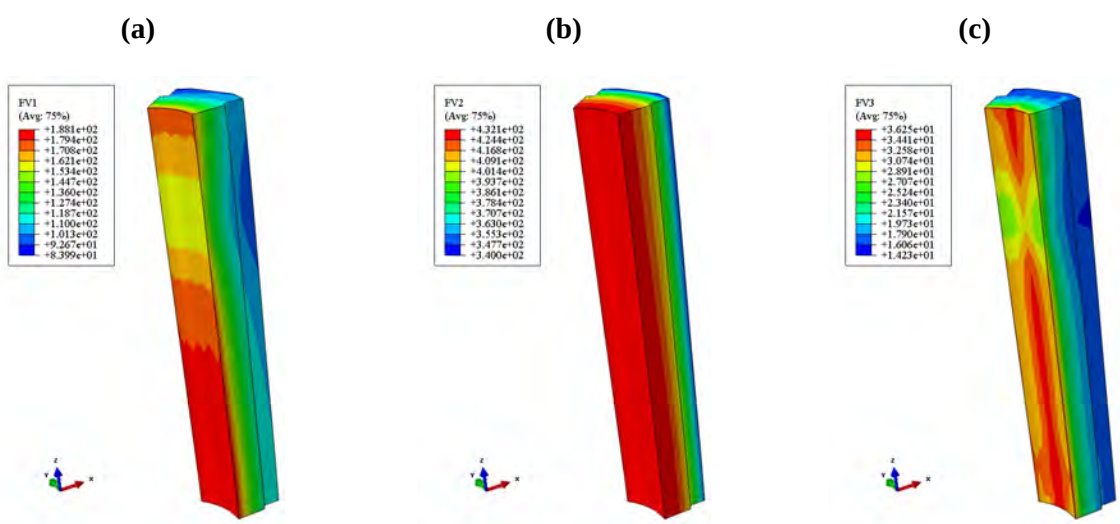

Figure 3. Examples of field variables; a) fluence; b) irradiation temperature; c) weight loss

Baseline parameters

The ManUMAT subroutine is a combination of models originally developed at British Energy (2003) and the new models derived by Eason et al. (2005 & 2008). The standard inputs or baseline parameters for the ManUMAT and for the FEA of reactor, graphite components were obtained from the other ongoing research project within the BCN, British Energy (2003), MTR and other experimental means. Typical example of the baseline parameters are shown in Table 1.

Table 1: Example of baseline dimensional change parameters

Parameter	Baseline value
Dimensional change coefficient *A1*	2.762
Dimensional change coefficient *A4*	0.965
Dimensional change weight loss term *z*	0.05

SENSITIVITY ANALYSIS

The model presented here starts with the step of sensitivity analysis. Empirical equations and FEM were used and the baseline parameters are varied and compared with the available experimental, MTR or CBMU data (whichever was appropriate). Here in this paper to show the concept, the dimensional change [Equation 1- Eason et al. (2005)] in the brick is compared with the experimentally measured data by varying dimensional change parameters (Table 2) (as an example). Each of these inputs was varied independently (and in some cases, combined as well) between perceived 'realistic' limits i.e. between the experimental data range. Those parameters were identified which caused a notable change in radial displacement which was greater than 0.02%. These were found to be of major importance i.e. greater than 0.05% which are dimensional change terms *A1* and *A4*, and weight loss term *z* (Example is shown in Figure 4). Once the parameters were identified, these were then used in the construction of design matrices for FE iterative runs.

$$DimChg=DR^{B3}\ [B1(DR-A4)^2-B2] \tag{1}$$

where, *DR* is a dose ratio, *B2* and *B3* are fitting functions and *B1* is a dependent function of fitting functions, initial dose ratio, irradiation temperature and dimensional change coefficients.

Table 2: Example of limits for sensitivity analysis

Parameter	Maximum	Minimum
Dimensional change coefficient *A1*	3.05	2.15
Dimensional change coefficient *A4*	1	0.89
Dimensional change weight loss term *z*	0.1	0

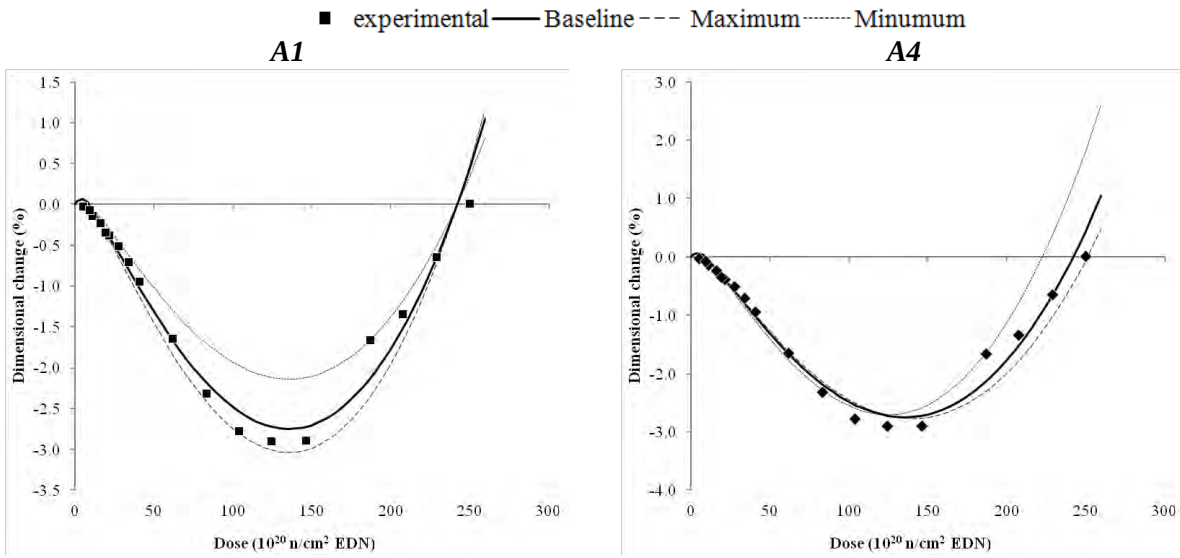

Figure 4. Variation of dimensional change coefficients

DESIGN MATRIX

To get the input matrix for the emulation and calibration purpose, it is important to have enough data to cover the design space being investigated. For this purpose a design matrix was built using the identified parameters (from the previous step i.e. sensitivity analysis). The limits (Table 2) were then used to build a design matrix. In the current investigation a design matrix of 50 points was built (a typical example can be found in Table 3) and these were implemented into a set of FEA. Other parameters (which were not sensitive) were kept at their baseline values in the FEA.

Table 3: Typical example of design matrix for FEM

Design Points	***A1***	***A4***	***z***
Dp-01	2.546	0.921	0.02
Dp-02	2.238	0.996	0.01
Dp-03	3.096	0.992	0.03
Dp-04	3.162	0.959	0.1
Dp-05	2.458	0.963	0.09
Dp-06	2.832	0.954	0.06
.	.	.	.
.	.	.	.
.	.	.	.
Dp-50	2.524	0.925	0.09

Once the FEA was run for all the design points, results (Figure 5) were collated for an input to the emulator or calibration purpose. In this research the average bore radius at the mid-height over time (two full power years) is obtained for each FE model or design point.

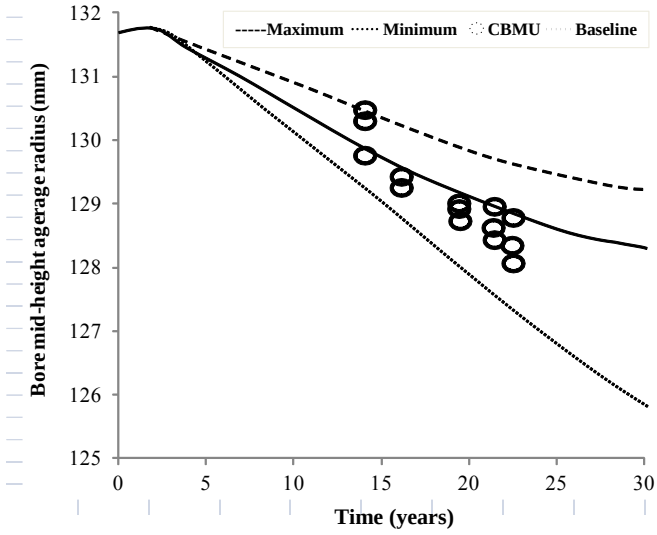

Figure 5. Examples of bore mid-height average radii from the design point FEA

EMULATION AND CALIBRATION

The Bayesian emulator used in this research was built in HSL (details are not presented in this paper) and is based on a Gaussian Process (GP) regression model. Emulator used as a substitute for the FEM and is designed in such a way that it helps in reducing the number of runs of FEM. This approximation technique is adopted to cover those design points which were not covered by FEM i.e. points which were not covered by the design matrix. Here in this research, the model links predictions of brick bore average radii at mid-height from the emulator to CBMU observations and fine tune discrepancies between predictions and observations and output the results at the best fit.

Calibration can be conducted for each layer as well as for a completed channel (multiple layers) using different themes. In this paper three themes were used, which are: (1) All three parameters could vary per layer, (2) All parameters are set same for the whole channel, (3) Two of the parameters (*A1* and *A4*) remain common to all layers but the third (dimensional change weight loss term *z*) vary per layer. The expectation was that the parameters would be common per reactor as there should only be scatter in the underlying behaviour and properties in the graphite per layer due to inhomogeneity in the material, batch differences etc. In the current example the output from the emulator deduced that by using theme 3 the calibration gives a better agreement with the CBMU data as compared to the theme 2 and to single layer calibrations. Typical examples of calibrated parameter are given in Tables 4.

Table 4. Example of calibrated parameters

Layer No.	***A1***	***A2***	***z***
3	2.87	1.012	0.032
4	2.779	1.001	0.031
.	.	.	.
.	.	.	.
10	2.656	0.923	0.055

The main aim of this paper is to present the methodology devised, therefore, here the results are not discussed technically. The model presented here has provided some promising results including calibrated parameters which can be used to analyze other underlying parameters to study the behaviour of nuclear graphite under combined effect of both irradiation and radiolytic oxidation. The technique presented here is the first step towards the wide scope of BCN project.

CONCLUSION

A model is devised using the combined finite element and Bayesian emulator approach. The model is applied to the investigation of dimensional changes of the graphite in both fast neutron irradiation and oxidizing environment. Application of this approach in the presented paper devised that, except the dimensional change parameters *A1 (WG), A4 (WG)* and the oxidation term *z*, the bore mid-height average radius is insensitive to all other parameters. In future, the focus will be placed on determining the suitable matrix for stresses and ovality and conducting a similar combined finite element and statistical approach to study the ovality and the stress behavior under oxidation environment. The work which is being conducted in BCN is the anticipation for the future prediction and may lead to the understanding of cracking behaviour of the brick bore and hence the key way root of the nuclear graphite.

ACKNOWLEDGEMENT

The authors wish to thank the Office for Nuclear Regulation (Health & Safety Executive), UK for sponsoring this project.

DISCLAIMER

Any views or opinions presented are those of the authors and do not necessarily represent those of the sponsor.

REFERENCES

British Energy Generation Ltd, (2003). "Compendium of CAGR core and sleeve data and methods," *British Energy Generation Limited*, CSDMC, Paper 28.

Chang, S.J. (1974). "Viscoelastic analysis of irradiated graphite with variable creep coefficient," *Journal of Nuclear Engineering and Design*, 30, 286-292.

Eason E, Hall G, Marsden B, Heys G. (2005), " Development of a Model of Dimensional Change in AGR Graphites irradiated in Inert Environments," *Conference on Ageing Management of Graphite Reactor Cores*, Wales, 43-45.

Eason E, Hall G, Marsden B, Heys G. (2008),"Development of a Youngs modulus model for Gilsocarbon graphites irradiated in inert environments," *Journal of Nuclear Materials,* 381(1-2): 145-151.

Kelly, B.T. (1982). "Graphite - The most fascinating nuclear material," *Carbon*, 20(1), 3-11.

Neighbour, G.B. (2001). "Modelling dimensional change with radiolytic oxidation in AGR moderator graphite, Ageing studies and lifetime extension of materials," *Chapter 2, Part 4, Springer, US*, 419-427.

Tsang, D.K and Marsden, B.J. (2006), "The development of a stress analysis code for nuclear graphite components in gas-cooled reactors," *Journal of Nuclear Materials,* 350, 208–220.

Tsang, D.K and Marsden, B.J. (2008), "Constitutive material model for the prediction of stresses in irradiated anisotropic graphite components," *Journal of Nuclear Materials,* 381, 129-136.