Transactions, **SMiRT-25**
Charlotte, NC, USA, August 4-9, 2019
Division VII

SEISMIC FRAGILITY OF ANCHORED FLAT-BOTTOM STORAGE TANKS ON RING FOUNDATIONS

Abhinav Anup[1], Philip S. Hashimoto[2], Robert P. Kennedy[3]

[1] Senior Staff I, Simpson Gumpertz & Heger Inc., Newport Beach, CA, USA (aanup@sgh.com)
[2] Senior Principal, Simpson Gumpertz & Heger Inc., Newport Beach, CA, USA (pshashimoto@sgh.com)
[3] Principal, RPK Structural Mechanics Consulting, Oceanside, CA, USA (bob@rpkstruct.com)

ABSTRACT

Seismic fragility evaluations of anchored flat-bottom storage tanks typically follow the approaches outlined in EPRI (1991) and EPRI (1994a), which are intended for tanks founded on rigid mat foundations. Direct application of these approaches is inappropriate for tanks anchored to ring foundations. Ring foundations are typically lightweight and can uplift at low seismic accelerations due to tank overturning, resulting in a significantly different behavior from tanks on mat foundations. This paper presents a case study of a metal flat-bottom storage tank anchored to a reinforced concrete ring foundation. A nonlinear static pushover analysis was performed as part of the tank seismic fragility evaluation to account for more realistic behavior. Several nonlinearities were captured in the analysis: foundation uplift, elongation of anchor bolts, mobilization of fluid hold-down forces with uplift of the tank base, and yielding of underlying soil under bearing at the toe of the foundation.

The analysis results showed that as the applied overturning moment increased, the forces in the anchor bolts increased until they quickly became large enough to uplift the foundation at the heel, without exceeding their yield strengths. Thereafter, as the foundation continued to uplift under increasingly applied overturning moment, the anchor bolt forces did not increase appreciably, and the tank-foundation system underwent rigid-body rocking. The pushover analysis was continued until the foundation uplifted sufficiently to fail essential piping attached to the tank. At this stage, the computed compression stresses in the tank shell near the toe, flexural and shear demands in the ring foundation, and soil bearing stresses at the foundation toe were much lower than their respective limit states. Consequently, the tank overturning capacity was limited by the foundation uplift failing piping attached to the tank.

INTRODUCTION

The tank at the focus of this study was included on the Seismic Equipment List for a nuclear power plant seismic probabilistic risk assessment (SPRA). It is a metal flat-bottom storage tank anchored to a reinforced concrete ring foundation used to store diesel fuel oil at atmospheric pressure. Initial risk quantifications using representative fragility estimates identified the tank amongst the significant risk contributors. This necessitated a detailed and realistic evaluation of the tank seismic fragility.

Traditional metal flat-bottom tank fragility evaluation approaches outlined in EPRI (1991) and EPRI (1994a) are intended for tanks founded on rigid mat foundations. Ring foundations are typically lightweight. A small tensile load on the tank anchor bolts due to tank overturning can uplift the ring foundation, resulting in significantly different behavior from tanks on mat foundations. The Generic Implementation Procedure (GIP, SQUG (2001)) classifies tanks on ring foundations as outliers. The GIP recommends using energy methods to compute how much the tank and the foundation uplift, and to check

whether the tank shell, bottom plate, and associated welds can accommodate the uplift. An additional check on the adequacy of the foundation reinforcement is also recommended.

A realistic seismic fragility of a tank anchored to a ring foundation can be developed using suitable modifications to evaluation methodologies in EPRI (1991) and EPRI (1994a). One such modification suggested in EPRI (1994b) is to limit the anchor hold-down strength to the tributary foundation weight plus the tributary foundation uplift resistance from the surrounding soil. The approach presented in this paper is an enhancement to these traditional methodologies to better capture the behavior of uplifting tank-foundation systems, such as tanks on ring foundations.

PROBLEM DESCRIPTION

Tank Configuration

Figure 1 illustrates the construction of the flat-bottom vertical cylindrical steel tank under investigation. The tank has a nominal diameter of 15 ft, with a 0.25 in. thick tank shell that is 19.5 ft tall. It is covered by a 0.25 in. thick spherical domed roof and has a 0.25 in. thick bottom plate. The tank stores diesel fuel oil (specific gravity of 0.85) at atmospheric pressure. Under normal operation, the tank fluid height is 18 ft. Attached piping includes the fuel inlet and outlet lines and a drain line. These lines come off the tank shell near the base on the tank.

The tank is anchored to a reinforced concrete ring foundation using five 1.5 in. diameter ASTM A307 anchor bolts. Figure 2 provides details on the tank ring foundation. The ring foundation has outer and inner diameters of 17 ft and 13 ft, respectively, with a vertical depth of 4 ft. Anchor bolt chairs are provided to transfer the stresses in the tank shell to the foundation through the anchor bolts.

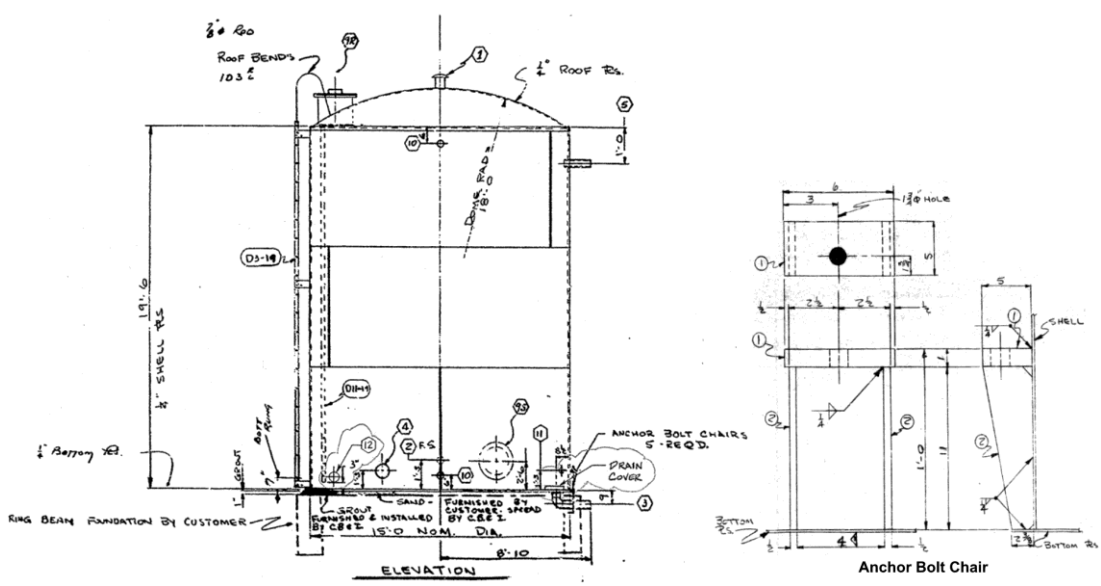

Figure 1. Tank Geometry

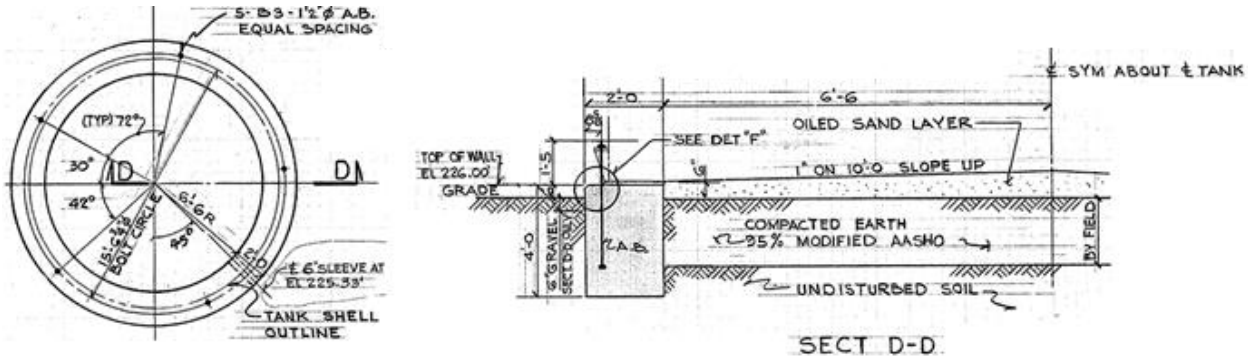

Figure 2. Tank Ring Foundation Details

Site Configuration and Seismic Input

For the purposes of the analysis, the soil profile underlying the ring foundation was approximately characterized by a uniform halfspace having a shear wave velocity of 800 ft/sec, material damping of 3.3%, unit weight of 126 pcf, and Poisson's ratio of 0.49. The bearing capacity of the soil underlying the tank foundation is 20 ksf.

The seismic input to the tank was the SPRA Reference Earthquake (RE) ground motion spectra at grade, shown here in Figure 3. The RE horizontal peak ground acceleration (PGA) was 0.303g.

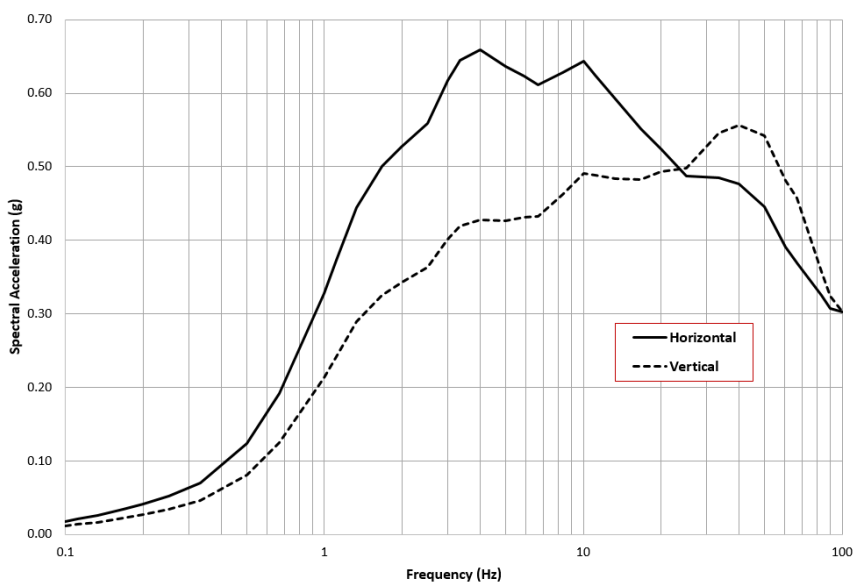

Figure 3. Reference Earthquake Ground Motion Spectra, 5% Damping

SEISMIC RESPONSE ANALYSIS

Seismic response analysis of the tank was performed in accordance with EPRI (1994a), supplemented by more recent guidance in ASCE (2017). The tank response was characterized using four modes: impulsive mode, convective mode, fluid vertical mode, and the tank shell vertical mode. The first two modes are excited by the horizontal seismic input, while the latter two are excited by the vertical seismic input. Soil-structure interaction (SSI) effects were incorporated for the impulsive and the fluid vertical modes

following the guidance presented in EPRI (1989), Roesset (1980), and Veletsos and Verbic (1973). SSI effects were judged insignificant for the convective mode since the computed fixed-base frequency for the mode was too low to be affected by SSI. The computed fixed-base frequency for the tank shell vertical mode was very high; it was judged that the shell vertical response incorporating SSI can be reasonably characterized by the vertical PGA (spectral acceleration at 100 Hz).

Table 1 summarizes the modal response parameters computed for the tank. Fixed-base damping of 2% was assigned for all modes except the convective mode. This was in accordance with Table 3-1 of ASCE (2017) for welded structures at Response Level 1, which was considered appropriate based on the low tank shell stresses and anchor bolt forces at failure (as determined later). Table 1 shows that SSI significantly affected the tank impulsive frequency and damping. The effect on the fluid vertical mode frequency was relatively moderate. However, a very high SSI damping was computed for the fluid vertical mode. It was judged prudent to limit the damping in this case to 20%.

RE responses from the impulsive and convective modes were combined using the square root of sum of squares (SRSS) modal combination rule to yield the total response from horizontal components. This total horizontal response was combined with the response from the vertically excited modes using the 100-40 component combination rule to yield the total RE response. The direction of the vertical seismic component was taken upward, which was determined to be the governing vertical direction for the tank seismic fragility. The total RE base shear and overturning demands were computed as 62 kip and 595 kip-ft, respectively.

Table 1. Evaluation of Tank Modal Responses

Mode	Fixed-Base Tank Dynamic Parameters		SSI Tank Dynamic Parameters		Reference Earthquake Spectral Acceleration Demand at SSI Frequency and Damping (g)
	Frequency (Hz)	Damping (%)	Frequency (Hz)	Damping (%)	
Impulsive	22.3	2	13.6	11	0.47
Convective	0.45	0.5	0.45	0.5	0.20
Fluid Vertical	23.8	2	17.3	20	0.33
Tank Shell Vertical	>100	-	>100	-	0.30

SEISMIC CAPACITY EVALUATION

The tank ring foundation weighs about 60 kip. This amounts to a tributary foundation weight of 12 kip per anchor bolt, which is much lower than the yield strength of the 1.5 in. diameter ASTM A307 anchor bolts. It was thus evident that the foundation would uplift much before anchor bolt yielding, and the resulting effect on the tank seismic capacity had to be incorporated into the fragility evaluation.

The tank failure modes of interest were seismic overturning and sliding. Tank overturning capacity was determined based on a nonlinear static pushover analysis using the computer program SAP2000 (CSI (2010)). The pushover analysis captured the following nonlinearities:

- Foundation uplift
- Stretching of anchor bolts under tensile yielding
- Mobilization of fluid hold-down forces with uplift of the tank base
- Soil bearing yielding

At each step of the pushover analysis, the following limit states were checked: tank shell buckling, flexural and shear failure of the ring foundation, and tank uplift. The tank uplift was limited by failure of the attached fuel inlet and outlet lines. It was determined in a separate analysis that a tank uplift of 1.3 in. would result in failure of the attached fuel lines, resulting in loss of inventory. The applied overturning moment at the first step when either of these limit states was achieved is the tank seismic overturning capacity. Once the tank overturning capacity was determined, tank sliding was checked in accordance with the guidance presented in EPRI (1994a).

Pushover Analysis Finite Element Model

Figure 4 shows the SAP2000 structural model developed for the tank pushover analysis. The model represents the portion of the tank from the top of the anchor bolt chairs to the bottom of the ring foundation. Model X and Y axes are in the horizontal plane, with the Z axis oriented upward following the right-hand rule. The model origin (Z = 0) was set at the base of the tank ring foundation and coincides with the centers of the tank and its foundation in plan. All degrees of freedom were restrained at the base of the model.

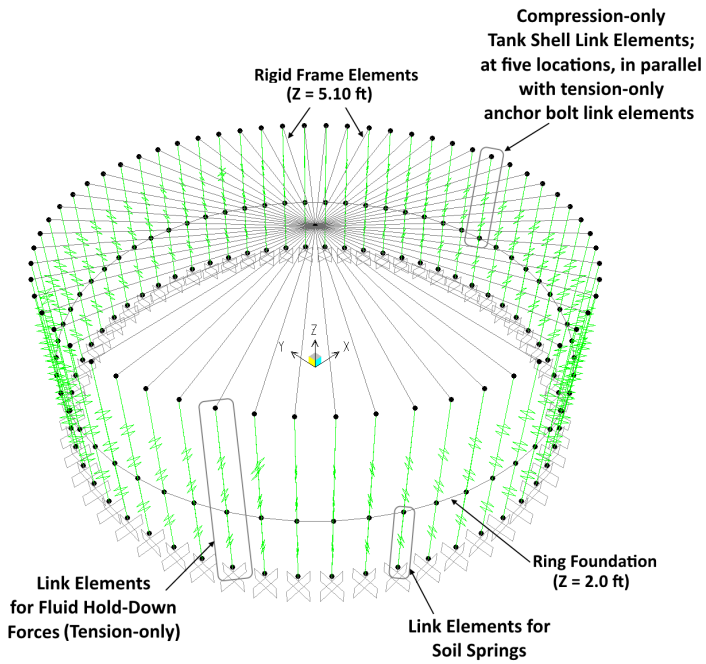

Figure 4. SAP2000 Model

The tank ring foundation was modeled using frame (beam) elements located at the foundation centerline in the horizontal plane at Z = 2 ft. Frame elements with very high stiffness properties were used to tie together the nodes located in the horizontal plane at Z = 5.1 ft, effectively making them behave as part of a rigid plane. These nodes were located at the tank shell radius (7.5 ft) to represent the tank shell cross section at the top of the anchor bolt chairs. The high stiffness frame elements enforced the plane sections remain plane condition at the top of the anchor bolt chairs in the model. This is consistent with the rigid tank base rotation approximation used in the EPRI (1994a) methodology.

The link elements in the model can be categorized into four distinct sets: *Shell*, *Anchor*, *Fluid*, and *Soil*. The *Shell* set of link elements implemented the force-deformation behavior associated with the compression in the tank shell between the top of the anchor bolt chairs and the tank bottom plate. These

elements were compression-only, and connected the foundation frame element nodes to the corresponding "tank" nodes at Z = 5.10 ft. The *Anchor* set of five tension-only link elements represented the tank's five anchor bolts. They connected the foundation frame element nodes to the nodes at Z = 5.10 ft at their respective locations. The *Fluid* set of link elements implemented the force-displacement behavior associated with the tank fluid hold-down forces. These elements were tension-only, and connected the restrained base nodes at Z = 0 to the nodes located in the horizontal plane at Z = 5.10 ft. The *Soil* set of link elements were soil springs that accounted for the bearing resistance of the soil underlying the foundation, and the frictional resistance at the sides of the foundation against uplift. These link elements connected the restrained base nodes at Z = 0 to the foundation frame element nodes.

Figure 5 illustrates the construction of the model and the various relationships implemented by the different sets of link elements in the model. The parameters required to define the relationships are identified in the figure. The tank shell buckling strength (C_{bk}) was computed following the median-strength buckling equations presented in EPRI (1994a). The tank shell stiffness (K_{sh}) and the link element deformation at buckling (δ_{bk}) were computed based on the distribution of compressive shortening over the height of the anchor bolt chairs in accordance with EPRI (1991).

The anchor bolt strength (T_{BC}) was determined to be governed by bolt steel yielding, justifying the elastic-perfectly force-displacement relationship represented in the model. The anchor bolt stiffness (K_{ab}) and the link element deformation at yield (δ_y) were computed using the median material properties of the anchor bolt steel.

The soil bearing strength (C_{br}), stiffness (K_{ss}), and the link element deformation at yield due to bearing (δ_{br}) were obtained and/or computed from the available geotechnical information on the soil profile underlying the tank foundation. These data included lateral earth pressures on the vertical faces of the ring foundation, which were used to compute the frictional resistance (T_{frc}) offered by the surrounding soil against tank uplift.

The computation of parameters T_{fo} and K_f in Figure 5 to describe the mobilization of fluid hold-down forces with tank uplift followed the procedure described in EPRI (1994a). The values of these parameters depend on the fluid pressure, which varies along the tank circumference. As such, these values had to be uniquely computed for each *Fluid* link element in the model, corresponding to the fluid pressure at the location of the link element. Since the fluid pressures depend on the seismic demand, iteration was required on the subsequent pushover analysis: the fluid pressures on which the link element properties were based had to correspond to the overturning capacity computed from the pushover analysis.

Nonlinear Pushover Analysis

The nonlinear pushover analysis was performed in two successive load steps: (1) force-controlled application of gravity loads, and (2) displacement-controlled application of seismic loads. Gravity loads included the tank empty weight and the foundation self-weight. Seismic loads included the corresponding vertical inertial loads on the tank shell and the foundation, along with the RE overturning moment. Explicit application of hydrostatic and hydrodynamic loads was not required since the effects of these loads were already accounted in the force-displacement relationship implemented by the *Fluid* link elements. The vertical tank shell inertial load was applied upward on the tank shell nodes located at Z = 5.10 ft. The vertical foundation inertial load was applied upward on the foundation nodes located at Z = 2 ft. The RE overturning moment was applied about the (-)Y axis at the center of the tank shell nodes (i.e., at the node located at X = 0, Y = 0, and Z = 5.10 ft). The high stiffness frame elements transferred this applied moment to the tank shell nodes while maintaining their coplanarity (plane sections remain plane condition).

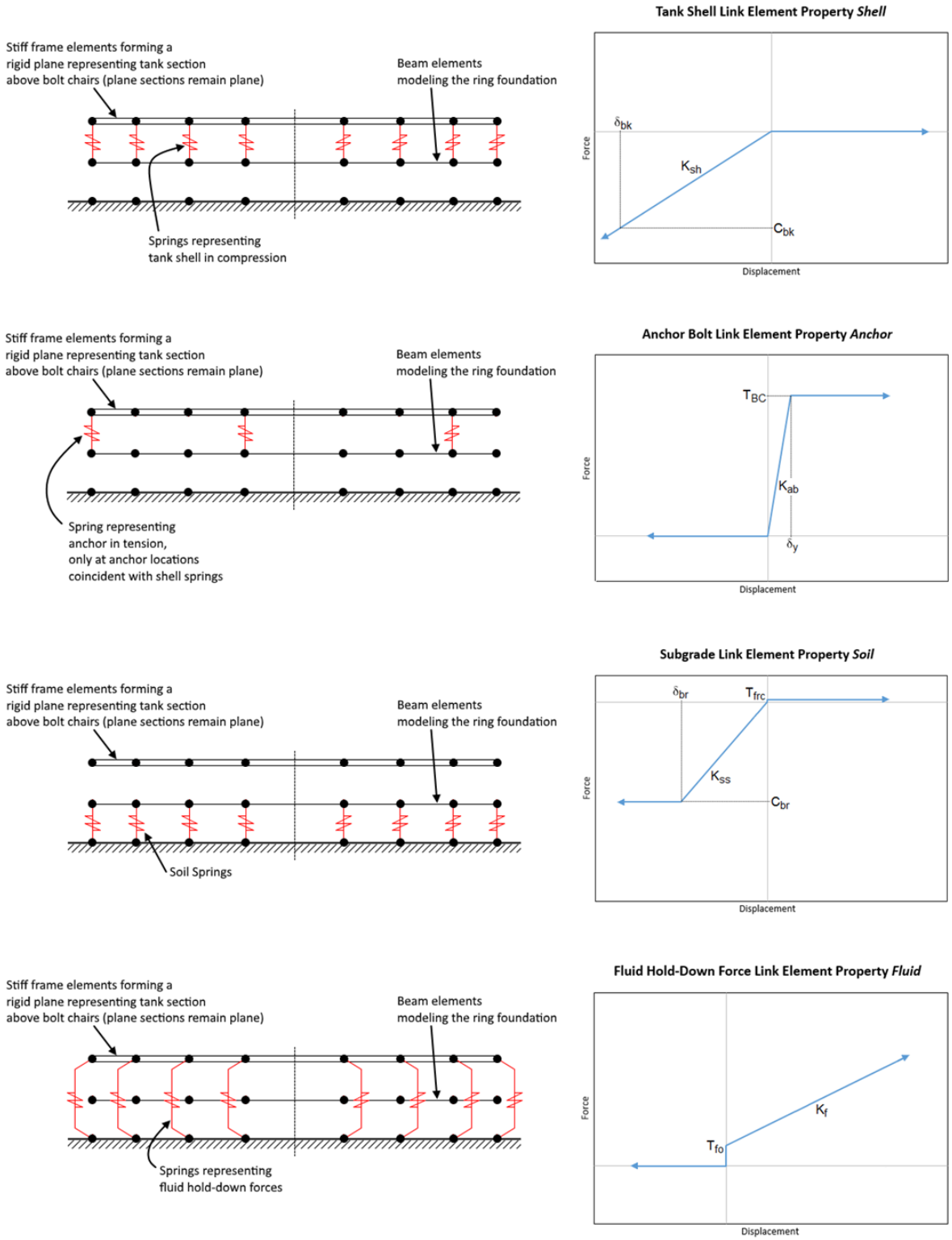

Figure 5. Link Elements Defined in SAP2000 Model

The application of seismic loads was displacement-controlled, with the monitored displacement being the vertical displacement at the tank shell node on the (+)X axis. This node corresponded to the heel of the overturning tank; therefore, its vertical displacement represents the tank uplift. The applied seismic loads started from zero (at the end of the gravity load step) and were incrementally scaled up until the tank uplift reached 1.3 in. (i.e., the maximum permissible tank uplift to preclude failure of the attached fuel lines).

Analysis Results

Figure 6 shows the deformed shape of the model at the end of the pushover analysis and the computed pushover curve. The curve starts out with a negative tank uplift, which is due to tank shell compression under gravity loads. At the maximum permissible tank uplift of 1.3 in., the base overturning moment (surrogate for the applied overturning moment) is 1,050 kip-ft.

At each step of the pushover analysis, the limit states corresponding to tank shell buckling, flexural failure of the foundation, and foundation shear failure were checked. These limit states were never reached during the course of the analysis. The tank overturning moment capacity was thus determined to be limited by tank uplift failing the attached fuel lines. Review of the analysis results also indicated that none of the anchor bolts yielded, and foundation bearing forces never exceeded the soil bearing capacity.

A detailed study of the analysis results showed that as the applied overturning moment increased, the forces in the anchor bolts increased until they become large enough to uplift the foundation at the heel. This occurred at bolt forces much lower than their yield strengths, as anticipated. On the pushover curve, this stage is marked by the point where the curve rolls over. Thereafter, as the foundation continued to uplift under increasingly applied overturning moment, the anchor bolt forces did not increase appreciably, and the tank-foundation system essentially underwent rigid-body rocking. The increase in overturning resistance with increasing uplift during this stage (the second slope in the pushover curve) was due to increasing fluid hold-down forces with increasing tank uplift. This continued until the end of the analysis, when the uplift at the heel of the tank was large enough (1.3 in.) to fail the attached fuel lines. The base overturning moment at this uplift was 1,050 kip-ft (Figure 6). Thus, the tank overturning capacity was computed as 1,050 kip-ft.

With the tank overturning capacity determined, tank sliding was checked in accordance with EPRI (1994a). It was determined to be non-governing.

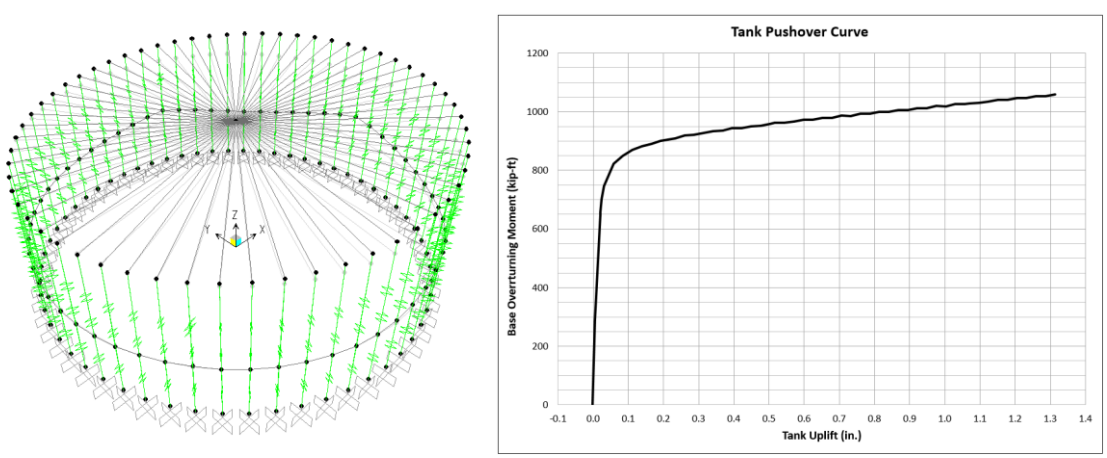

Figure 6. Tank Deformed Shape (Left) and Pushover Curve (Right)

TANK SEISMIC FRAGILITY

Median Ground Motion Capacity

Following the Separation of Variables (SOV) approach described in EPRI (1994a), the median ground motion capacity, A_m , was calculated as the product of three terms: (1) the RE ground motion parameter, A_{REF}; (2) the median elastic RE scale factor, FS_{Em}; and (3) the median inelastic energy absorption factor, $F_{\mu m}$, which accounts for hysteretic energy dissipation and frequency shift from initial yield to the failure limit state. The RE ground motion parameter for the plant SPRA was the RE horizontal PGA at grade (0.303g).

The tank overturning capacity was determined to be 1,050 kip-ft, about 1.8 times the RE overturning moment. Thus, the elastic RE scale factor was 1.8. However, the pushover curve (Figure 6) indicates considerable nonlinearity in the tank response as it uplifts. This nonlinearity is accompanied by very little hysteretic response since forces in various structural elements were well below their strength limits. Essentially, the frequency of the tank reduces from the elastic frequency to the secant frequency at the maximum permissible tank uplift, but this reduction in frequency happens at elastic damping (11%, Table 1). The elastic RE scale factor was consequently adjusted by a factor to account for this frequency reduction at elastic damping. Since the tank response was governed by the impulsive mode, this factor was computed as the ratio of the spectral accelerations at the elastic impulsive frequency to the secant impulsive frequency at elastic damping. The impulsive secant frequency at the maximum permissible uplift of 1.3 in. was estimated to be about 3 Hz, as compared to the elastic impulsive frequency of 13.6 Hz (Table 1). However, due to broad-banded nature of the input spectra (Figure 3), the difference in the spectral accelerations at the elastic and secant impulsive frequencies was minor, with the ratio of secant to elastic impulsive spectral accelerations being 1.06. This ratio, multiplied by the elastic RE scale factor previously computed as 1.8, resulted in a median elastic RE scale factor, FS_{Em}, of about 1.9.

Since the tank response exhibited negligible hysteresis, the median inelastic energy absorption factor, $F_{\mu m}$, was assigned a value of unity. The median ground motion capacity for the tank was thus computed as:

$$A_m = FS_{Em}\, F_{\mu m}\, A_{REF} = 0.58g \tag{1}$$

Variabilities

In accordance with the SOV approach, variability in the tank ground motion capacity was characterized by logarithmic standard deviations for randomness and uncertainty. These standard deviations were estimated following the approximate second moment method described in EPRI (1994a). This involved computing the change in the ground motion capacity when the value of one of the probabilistic variables was changed by a known multiple of standard deviations while keeping all the other variables to their median values. Table 3 lists the probabilistic variables considered in the analysis, and their influence on the variability in ground motion capacity. The details of characterizing each variability are not discussed herein. The total logarithmic standard deviations for randomness (β_R) and uncertainty (β_U) were computed as 0.20 and 0.21, respectively.

The high confidence of low probability of failure (HCLPF) ground motion capacity, A_{HCLPF}. was then computed as:

$$A_{HCLPF} = A_m\, e^{-1.645\,[\beta_R+\beta_U]} = 0.30g \tag{2}$$

Table 3. Logarithmic Standard Deviations

Probabilistic Variable	β_R	β_U
Strength		
Maximum Permissible Tank Uplift	0	0.08
Soil Spring Stiffness and Bearing Capacity	0	0.02
Frictional Resistance	0	0.08
Fluid Pressures	0	0.05
Methodology	0	0.10
Ground Motion		
Horizontal Direction Peak Response	0.18	0
Vertical Component Response	0	0.00
Damping (fixed-base)	0	0.00
Frequency (fixed-base)	0	0.00
Modeling	0	0.07
Mode Combination	0.07	0
Earthquake Component Combination	0.05	0
Soil-Structure Interaction	0	0.13
Total	0.20	0.21

CONCLUSIONS

The seismic fragility of the tank under investigation was developed using a nonlinear pushover analysis. The analysis incorporated various nonlinearities such as foundation uplift, elongation of anchor bolts, mobilization of fluid hold-down forces with uplift of tank base, and soil yielding under bearing at the toe of the foundation. The tank seismic fragility was governed by failure of the attached fuel lines, resulting from foundation uplift due to tank overturning. The associated median and HCLPF ground motion capacities were determined to be 0.58g and 0.30g, respectively.

REFERENCES

American Society of Civil Engineers (2017). *Seismic Analysis of Safety-Related Nuclear Structures and Commentary*, ASCE/SEI 4-16, Reston, VA.

Computers and Structures, Inc. (2010). *Computer Program SAP2000*, Version 14.2.2, Berkeley, CA.

Electric Power Research Institute (1989). *The Effects of Soil-Structure Interaction on Laterally Excited Liquid-Storage Tanks*, EPRI NP-6500, Interim Report, Houston, TX.

Electric Power Research Institute (1991). *A Methodology for Assessment of Nuclear Power Plant Seismic Margin (Revision 1)*, EPRI NP-6041-SL, Palo Alto, CA.

Electric Power Research Institute (1994a). *Methodology for Developing Seismic Fragilities*, EPRI TR-103959, Palo Alto, CA.

Electric Power Research Institute (1994b). *Recommended Approaches for Resolving Anchorage Outliers*, EPRI TR-103960, Palo Alto, CA.

Roesset, J.M. (1980), *Seismic Safety Margins Research Program (Phase 1), Project III – Soil-Structure Interaction, A Review of Soil-Structure Interaction*, UCRL-15262, Lawrence Livermore Laboratory, Livermore, CA.

Seismic Quality Utility Group (2001). *Generic Implementation Procedure (GIP) for Seismic Verification of Nuclear Plant Equipment*, Revision 3A.

Veletsos, A.S and Verbic, B. (1973), *Vibration of Viscoelastic Foundations*, Structural Research at Rice Report No. 18, Department of Civil Engineering, Rice University, Houston, TX.