US007232721B2

(12) **United States Patent**
Basceri et al.

(10) **Patent No.: US 7,232,721 B2**
(45) **Date of Patent: Jun. 19, 2007**

(54) **STRUCTURES AND METHODS FOR ENHANCING CAPACITORS IN INTEGRATED CIRCUITS**

(75) Inventors: **Cem Basceri**, Boise, ID (US); **Vishnu K. Agarwal**, Boise, ID (US); **Dan Gealy**, Kuna, ID (US)

(73) Assignee: **Micron Technology, Inc.**, Boise, ID (US)

(*) Notice: Subject to any disclaimer, the term of this patent is extended or adjusted under 35 U.S.C. 154(b) by 321 days.

(21) Appl. No.: **10/931,396**

(22) Filed: **Aug. 31, 2004**

(65) **Prior Publication Data**

US 2005/0032299 A1 Feb. 10, 2005

Related U.S. Application Data

(62) Division of application No. 09/598,355, filed on Jun. 21, 2000, now Pat. No. 7,009,240.

(51) **Int. Cl.**
H01L 21/8242 (2006.01)
H01L 21/20 (2006.01)

(52) **U.S. Cl.** **438/253**; 438/398; 438/240

(58) **Field of Classification Search** 438/243–254, 438/396–398; 257/295–310
See application file for complete search history.

(56) **References Cited**

U.S. PATENT DOCUMENTS

5,142,438	A	8/1992	Reinberg et al.	361/313
5,177,570	A	1/1993	Tanaka	257/345
5,358,889	A	10/1994	Emesh et al.	437/60
5,463,483	A	10/1995	Yamazaki	359/58
5,622,893	A	4/1997	Summerfelt et al.	438/396
5,702,970	A	12/1997	Choi	438/396
5,814,539	A	9/1998	Nakazawa	438/163
5,815,427	A	9/1998	Cloud et al.	365/51
5,905,278	A *	5/1999	Nakabayashi	257/296
5,910,880	A	6/1999	DeBoer et al.	361/311
5,969,983	A	10/1999	Thakur et al.	365/149
6,066,540	A	5/2000	Yeom et al.	438/396
6,235,572	B1	5/2001	Kunitomo et al.	438/240
6,249,040	B1	6/2001	Lin et al.	257/532
6,262,450	B1	7/2001	Kotecki et al.	257/306
6,306,699	B1	10/2001	Matsubara et al.	438/210
6,545,856	B1 *	4/2003	Norga et al.	257/295
6,627,497	B2 *	9/2003	Nakanishi et al.	438/253
6,686,274	B1	2/2004	Shimazu et al.	438/653

OTHER PUBLICATIONS

Aoyama, T. , et al., "Ultrathin Ta2O5 Film Capacitor with Ru Bottom Electrode", *Journal of the Electrochemical Society*, 145(8), (1998),2961-2364.

(Continued)

Primary Examiner—Cuong Nguyen
(74) *Attorney, Agent, or Firm*—Schwegman, Lundberg, Woessner & Kluth, P.A.

(57) **ABSTRACT**

Systems, devices, structures, and methods are described that inhibit dielectric degradation at high temperatures. An enhanced capacitor is discussed. The enhanced capacitor includes a first electrode, a dielectric that includes ditantalum pentaoxide, and a second electrode having a compound. The compound includes a first substance and a second substance. The second electrode includes a trace amount of the first substance. The morphology of the semiconductor structure remains stable when the trace amount of the first substance is oxidized during crystallization of the dielectric. In one embodiment, the crystalline structure of the dielectric describes substantially a (001) lattice plane.
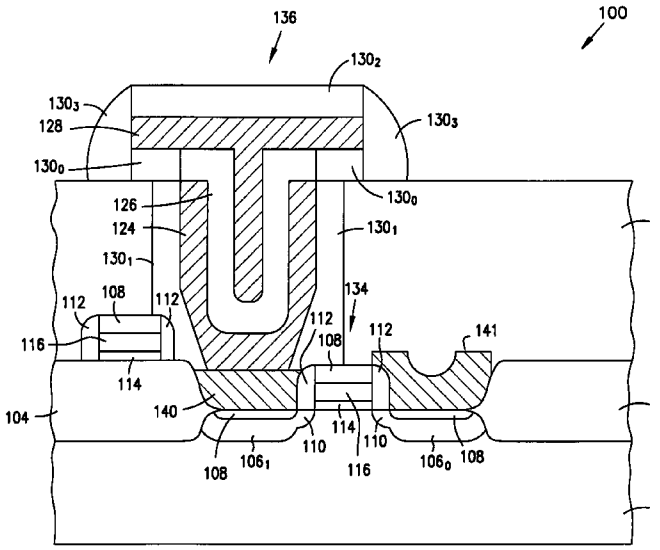
25 Claims, 17 Drawing Sheets