ABSTRACT

VILLALON, ADA VENUS. *Electron Beam Fabrication of Injection Mold Tooling with Conformal Cooling Channels* (Under the direction of Dr. Ola L.A. Harrysson and Dr. Denis Cormier)

Injection molding is the most common mass production process for plastic parts. All thermoplastics and some thermosets can be injection molded to achieve a wide variety of sizes and intricate shapes. Injection molded parts can be found everywhere, from electronics and power tools to appliances and automobiles. Due to the large impact that injection molding has on the manufacturing industry, companies constantly strive to shorten both cycle and product development time.

Rapid Tooling is a manufacturing technique used to produce injection mold tools in a short period of time. A new process for manufacturing rapid tools is proposed. With the Electron Beam Melting (EBM) process, the fabrication of fully dense, net shape tools is now feasible. Using the EBM process, certain features in the mold tool can be optimized such as the cooling system that is of critical importance in the part cycle time of a tool.

A heat transfer simulation study was carried out to find the effect of conformal cooling channels in the heat dissipation within a mold. Extensive experimentation was performed to obtain valuable guidelines for the design of conformal cooling channels in injection molds manufactured via EBM technology.

Electron Beam Fabrication of Injection Mold Tooling with Conformal Cooling Channels

By

Ada V. Villalon

A thesis submitted to the Graduate Faculty of
North Carolina State University
in partial fulfillment of the
requirements for the Degree of
Master of Science

INDUSTRIAL ENGINEERING

Raleigh
2005

APPROVED BY:

Dr. Jeffery Joines
Advisory Committee

Dr. Denis Cormier
Co-chair of Advisory Committee

Dr. Ola Harrysson
Chair of Advisory Committee

To

Mommy

BIOGRAPHY

Ada Venus Villalón Piñeyro was born on Novermber 26th, 1978 in Monterrey, Mexico. She attended to the Autonomous University of Nuevo Leon where she received her Bachelors of Science in Industrial Engineering. While still studying, she joined one of the major and oldest companies in Mexico (Cydsa Group) as an intern. After graduation, she obtained a full-time position in this company where she worked during two more years.

In 2002, she came to the United States to pursue a Master degree in Industrial Engineering. Her research interests are: Product Development, Manufacturing Processes and Rapid Prototyping.

AKNOWLEDGMENTS

First of all, I would like to express my gratitude to my advisor, Dr. Ola Harrysson for his continuous encouragement and support. Thank you for your patience and guidance along this project.

I would also like to thank Dr. Denis Cormier for his support, advice and his valuable time. Also, thanks to Dr. Jeffery Joines for being part of my advisory committee.

Many thanks to the other members of the Rapid Prototyping team: Dr. Harvey West, Mr. Jason Low, Mr. Kyle Knowlson and Mr. Tushar Mahale for their concern and support on this project.

TABLE OF CONTENTS

LIST OF FIGURES vi

LIST OF TABLES vii

1. INTRODUCTION 1

1.1 THE MOLDING MACHINE 2

1.2 THE INJECTION MOLD 2

1.3 CYCLE TIME AND COOLING 4

2. LITERATURE REVIEW 9

2.1 RAPID PROTOTYPING 9

2.2 RAPID TOOLING 20

2.3 CONFORMAL COOLING 23

2.4 COMPARING CONVENTIONAL AND CONFORMAL COOLING CHANNELS 25

2.5 RAPID TOOLING AND ELECTRON BEAM MELTING TECHNOLOGY 28

2.6 PROBLEM STATEMENT 29

3. ELECTRON BEAM MELTING 30

3.1 ELECTRON BEAM PROCESSING 30

3.2 MAKING STEEL PARTS WITH DOWN FACING SURFACES USING EBM TECHNOLOGY 37

3.3 PROBLEM DESCRIPTION 38

4. METHODOLOGY 39

4.1 REDUCTION OF ICICLES VIA PARTIALLY MELTED SUPPORTS 39

4.2 DETERMINATION OF CHANNEL WIDTH AND CURVATURE 42

4.3 COOLING CHANNEL GEOMETRY 43

5. RESULTS AND DISCUSSION 45

5.1 ICICLE EXPERIMENTATION RESULTS 45

5.2 POWDER REMOVAL RESULTS 54

6. CONCLUSIONS AND FURTHER RESEARCH 56

6.1 CONCLUSIONS 56

6.2 FURTHER RESEARCH 57

LIST OF REFERENCES 58

LIST OF FIGURES

Figure 1.1. Injection mold 3
Figure 1.2. Conceptual View of a Cooling System 6
Figure 1.3. Top and front views of a mold with uneven cooling 6
Figure 1.4. Top and front views of a mold with 2D conformal cooling 7
Figure 1.5. Top and front views of a mold with 3D conformal cooling 8
Figure 2.1. Stages of an RP system 10
Figure 2.2. Schematic view of the SLA process 11
Figure 2.3. Principle of the Solider Model-making machine 12
Figure 2.4. Schematic view of the SLS process 14
Figure 2.5. Schematic view of the 3D printing process 15
Figure 2.6. Layout of Arcam EBM S12 machine 17
Figure 2.7. Schematic view of the LOM process 19
Figure 2.8. Wire frame view of the molds with conventional (left) and conformal cooling channels 26
Figure 2.9. Top view of thermal gradient in mold with conventional cooling channels. 27
Figure 2.10. Top view of thermal gradient in mold with conformal cooling channels 27
Figure 2.11. Isometric view of thermal gradient 28
Figure 3.1. Arcam EBM S12 System (Courtesy of Arcam) 31
Figure 3.2. Parts of the Vacuum Chamber (Courtesy of Arcam) 33
Figure 3.3. Parts of the Electron Beam Gun (Courtesy of Arcam) 34
Figure 3.4. Calculation of scanned area 35
Figure 3.5. Electric density vs. current 37
Figure 3.6. Illustration of a down-facing surface 38
Figure 4.1. Test part used to find optimal post-heating parameters 39
Figure 4.2. SLC files of the test part 40
Figure 4.3. CAD Model of part used to find minimum channel width 42
Figure 4.4. CAD model of part used to find minimum curvature radius 43
Figure 4.5. Front view of a mold with the proposed channel geometry 44
Figure 5.1. Results of the first experiment 46
Figure 5.2. Results of the second experiment 47
Figure 5.3. Results of the third experiment 47
Figure 5.4. Results of the fourth experiment 48
Figure 5.5. Results of the fifth experiment 49
Figure 5.6. Results of the sixth experiment 50
Figure 5.7. Results of seventh experiment 50
Figure 5.8. Results of the eighth experiment 51
Figure 5.9. Results of the ninth experiment 52
Figure 5.10. Mold with conformal cooling channel 53
Figure 5.11. Front view of a mold with the proposed (sloped) channel geometry 53
Figure 5.12. Part used to find minimum channel width 54
Figure 5.13. Part used to find minimum curvature radius 55

LIST OF TABLES

Table 5.1. Parameters used in 1st experiment 45
Table 5.2. Parameters used in 2nd experiment 46
Table 5.3. Parameters used in 3rd experiment 47
Table 5.4. Parameters used in 4th experiment 48
Table 5.5. Parameters used in 5th experiment 49
Table 5.6. Parameters used in 6th experiment 49
Table 5.7. Parameters used in 7th experiment 50
Table 5.8. Parameters used in 8th experiment 51
Table 5.9. Parameters used in 9th experiment 52

1. INTRODUCTION

In the Injection Molding industry, as in any other, high productivity is one of the most important issues that have an effect on the success or failure of the company. According to Rees (2002) the productivity of a mold depends on the following factors:

- Number of cavities
- Quality of cooling
- Speed and timing of ejection
- Strength and durability of a mold
- Ease of installation and start-up

The cycle time for a part is inversely related to the quality of cooling; poor cooling quality leads to a long cycle time and part defects. Conversely, efficient cooling results in a short cycle time and fewer defects.

Cooling time has two main effects on the finished part. If the cooling time is short, the part will end up cooling outside of the mold cavity and therefore shrinkage will occur. On the other hand, if the part is left inside the cavity to cool, the shrinkage is reduced but internal stresses are formed. A compromise between these two effects must be taken into consideration to achieve optimal quality.

1.1 THE MOLDING MACHINE

As defined by Bryce (1996) the injection molding process consists of injecting molten plastic material from a reservoir into a closed mold, allowing the plastic to cool down and solidify, and ejecting the finished product from the mold. The time since the molten plastic is injected until the solidified part is removed is called cycle time, and it is typically in the range of 10 to 30 seconds, although longer cycles are not rare to find with large parts.

Injection molding is the most popular method to process thermoplastics and some thermosets. Continuous efforts have been made to increase the productivity of injection machines; these changes are often the replacement of the injection unit for a more efficient one, the re-design of the mold to simultaneously produce more than one part, cooling of the injected parts out of the cavity, etc.

1.2 THE INJECTION MOLD

A mold is the tool used in injection molding. It consists of two parts: the core or male and the cavity or female. When the mold is closed, the space contained between the core and the cavity will determine the shape of the injection molded part. The most important features of a mold are the distribution system, the cavity, the cooling system and the ejection system. The distribution system is comprised of the sprue and the runners; the sprue is the channel that conducts the molten polymer from the injection unit to the mold. The polymer then flows through the runners that are secondary channels into the cavity. The molten plastic is cooled by means of a cooling system comprised by an arrangement of cooling channels that

surround the periphery of the cavity circulating water or another cooling fluid. Once the plastic has solidified, the mold is opened and the part is ejected using the ejector pins. The mold is closed and a new cycle can start. Figure 1.1 illustrates the mold features.

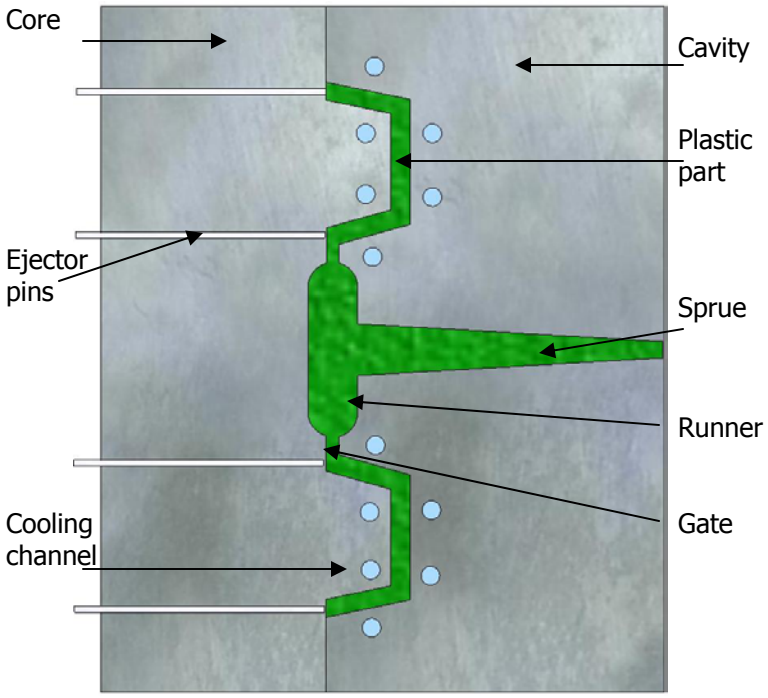

Figure 1.1. Injection mold

1.2.1 Making an Injection Mold

Molds are usually made out of metals that are able to withstand the injection pressures. Steel is the material commonly used to make injection molds because of the following properties: (Menges et. al, 2001)

- Economical workability (machining, electric discharge machining, polishing)
- Capacity for heat treatment
- Sufficient toughness and strength

- Resistance to heat and wear
- High thermal conductivity
- Corrosion resistance

Some non-ferrous metals can be used for the production of injection molds. The most common are copper alloys and zinc alloys. Although these materials offer a much higher thermal conductivity, their mechanical properties are inferior to those of steel. Therefore they are only used as auxiliary materials or to produce prototype molds.

The most common production methods are machining and casting, however, the lead-time for these techniques ranges from 12 to 16 weeks. New "Rapid Tooling" methods have been developed. Rapid Tooling employs Rapid Prototyping to make functional molds that produce plastic parts identical to those manufactured by conventional methods.

1.3 CYCLE TIME AND COOLING

Fast mold cooling is necessary in order to achieve high production rates, as cooling time represents a significant portion of the total cycle time - sometimes up to 80%. However, an inappropriate cooling rate can result in deformations if the part is ejected when it is still soft. Poorly designed cooling channels can also result in uneven cooling that produces warpage or other defects.

Some of the most important factors that affect the cooling of a mold are listed by Rees: (Rees, 2002)

- Flow of coolant
- Temperature increase of the coolant
- Chemical composition of the coolant
- Layout and sizing of cooling channels
- Thermal conductivity of mold parts

The heat contained in the molten plastic is transferred to the mold cavity, and it has to be removed so that the plastic can return to its solid form prior to ejection. The heat removal takes place mostly through the cooling medium. Some factors such as high flow pressures (in the order of 400-500 kPa), large cross sections of channels and turbulent flow are highly desired in order to remove the heat from the mold efficiently.

The cooling channels are an arrangement of drilled holes that are connected to form a passage that surround the periphery of the cavity. Figure 1.2 shows the conceptual view of a cooling system. A cooling medium, usually water, flows through these channels to remove the heat from the mold. Due to the nature of the manufacturing methods used, cooling channels typically lay flat in two dimensions. To encase the cavity, baffles have to be inserted to direct the flow in the desired direction and plugs have to be installed at the end of bores.

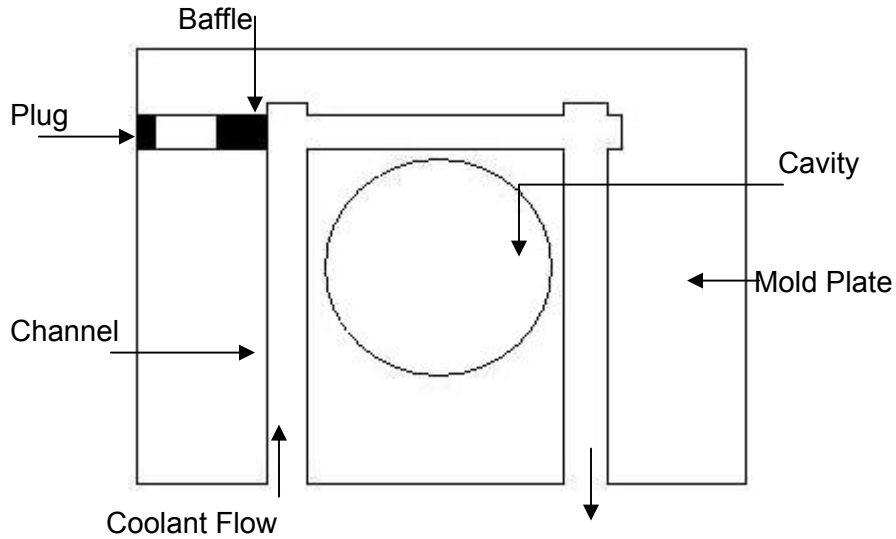

Figure 1.2. Conceptual View of a Cooling System

The main issue is that when the part to be molded has some kind of curvature there will be some spots closer to the cooling channels than others resulting in longer cooling times and warpage. An example of this is shown in Figure 3.1.

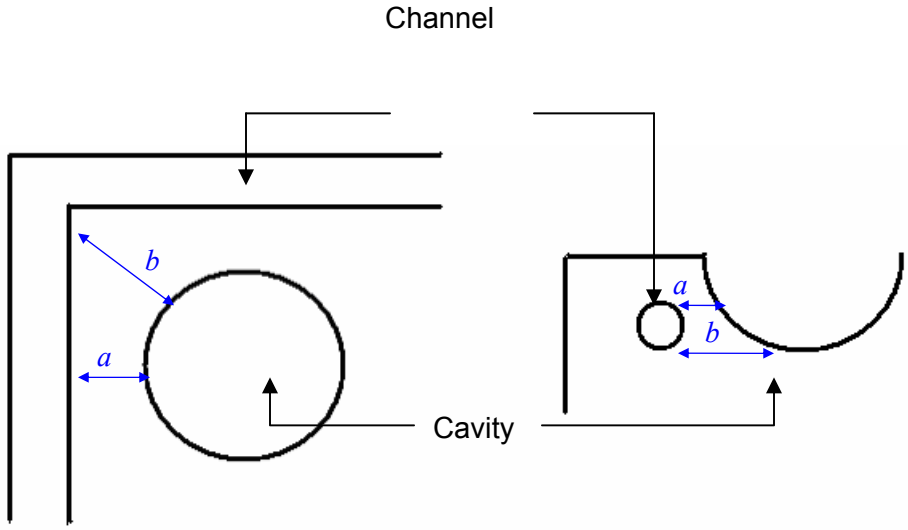

Figure 1.3. Top and front views of a mold with uneven cooling

Conformal cooling refers to a relatively new cooling method where instead of drilling straight holes into the mold, the mold is fabricated with curved channels that follow the form of the cavity.

2D conformal cooling involves the use of non-linear, but planar, channels machined into a slab. Figure 1.4 shows an example. The slab is welded or brazed to another slab. This method provides better cooling than conventional methods. However, the cross-section along the channel is uniform.

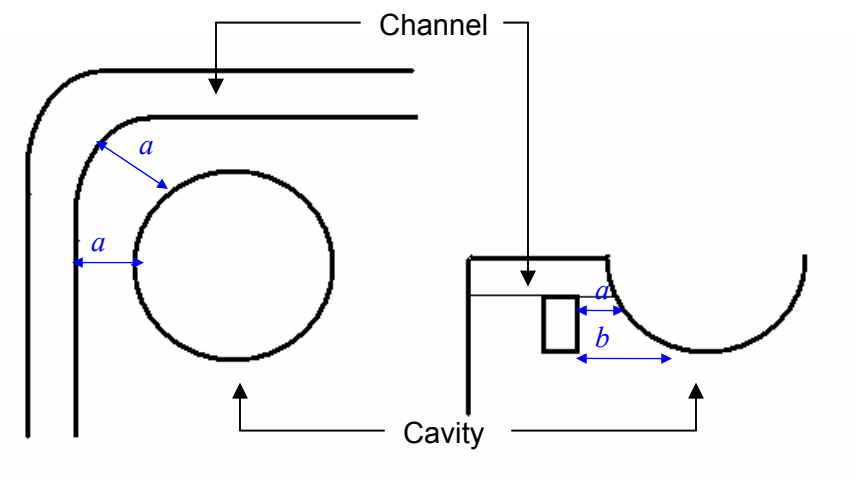

Figure 1.4. Top and front views of a mold with 2D conformal cooling

3D conformal cooling channels can only be produced by a limited number of direct-metal Rapid Prototyping techniques such as Selective Laser Sintering (SLS) or Electron Beam Melting (EBM). While SLS can produce sintered steel tools that are infiltrated with bronze, the EBM can produce fully dense H13 tool steel molds that are as durable as any mold fabricated by a conventional method (see figure 1.5).

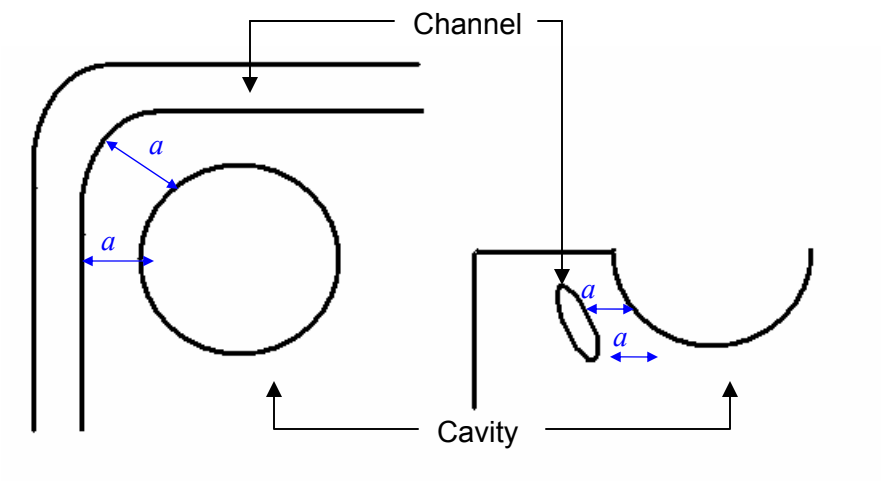

Figure 1.5. Top and front views of a mold with 3D conformal cooling

2. LITERATURE REVIEW

2.1 RAPID PROTOTYPING

2.1.1 What is Rapid Prototyping?

Rapid Prototyping (RP) is a technique normally used to produce engineering prototypes without the need for traditional tooling. Engineering prototypes are used by product designers to evaluate different aspects of a part such as functional fit, aesthetics, mechanical testing and marketing research, among others. Using RP, prototypes can be created within hours or days instead of weeks, reducing the time to market.

Recent advances in RP technologies have led to the use of prototypes as functional parts and for fabrication of tooling. For example the SLS, LENS and EBM processes have been used to produce metal tools.

RP requires a computer-aided design (CAD) model of the piece to be produced. This CAD model is then converted to a different format where the surfaces of the solid part are approximated by facets (triangles or polygons). This process is called tessellation, and the industry's default format is called STL. The stages of a RP system are illustrated in Figure 2.1.

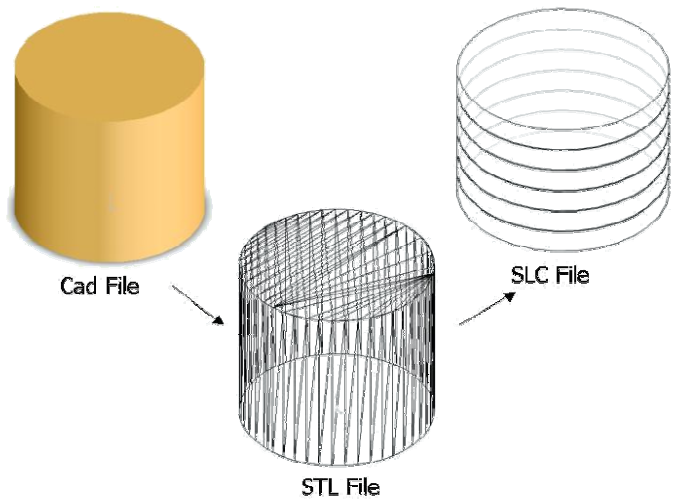

Figure 2.1. Stages of an RP system

Once the STL file has been created, the model is sliced into cross-sectional layers that are used by the RP machine. There are many RP technologies, but most work under the same principle of layer-wise material-addition. In order to fabricate each layer, it is necessary to "slice" the STL model. These slices are stacked one on top of another to create a solid part. This part of the process is known as slicing, and the file format is SLC.

2.1.2 Rapid Prototyping Technologies

The different technologies that exist now on the market can be grouped into three basic categories according to the form of the starting material (Kai, C. C. 1997). These categories are Liquid Based, Powder Based and Solid Based.

2.1.2.1 Liquid Based

Stereolithography (SLA)

The SLA-machine consists of a vat filled with a liquid photosensitive resin. A platform is placed slightly below the surface of the resin and a laser draws the cross-sectional area of one layer of the part to be made. When the laser impinges upon the resin a chain reaction takes place that cross links the polymer molecules and it solidifies. The platform is then lowered and the process is repeated, layer by layer, until the part is finished. The part is removed from the platform, cleaned and post-cured in a UV light oven. Figure 2.2 shows a schematic view of the SLA process.

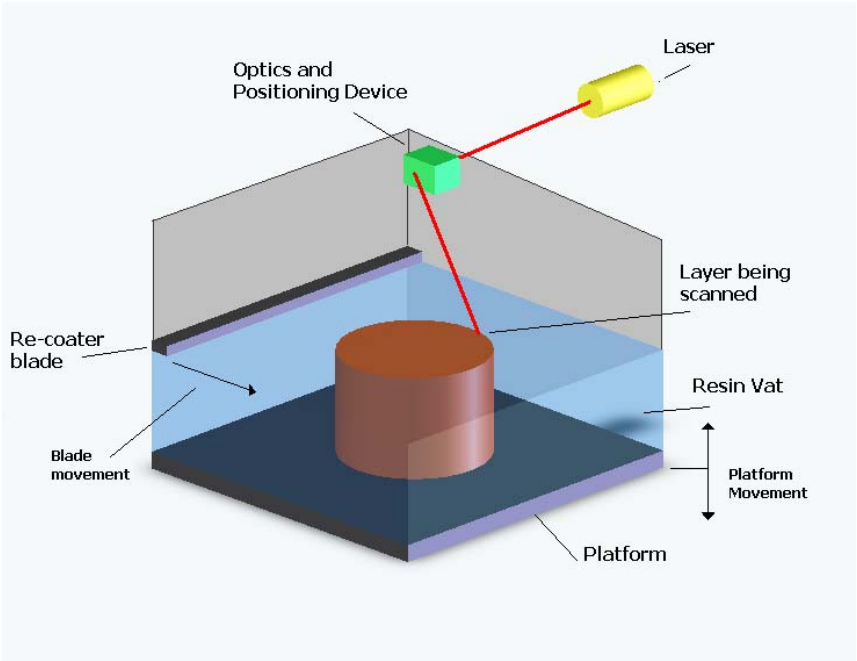

Figure 2.2. Schematic view of the SLA process

Parts made via the SLA process possess fairly good surface finish and accuracy and they can be used as patterns to make tooling. One disadvantage with this process is that when the part remains submerged in the vat it can absorb liquid resin and swell up thus losing some of its accuracy. The part can also become brittle if it is left too long in the UV oven or if it is overexposed to sunlight.

Solid Ground Curing (SGC)

This process consists of two phases. In the first phase, a mask with the negative of the layer is created. Then, in the second phase, a viscous polymer is spread over a platform and is then exposed through the mask to an UV flash. The exposed areas of the polymer are solidified and the remaining liquid is removed by a special vacuum cleaner. Molten wax is spread around the solid part. When the wax solidifies, it is milled to a uniform layer thickness. Another layer of viscous polymer is spread on top and the process is repeated. When all the slices have been created, the wax is melted off leaving the polymer part. (Smith, 1994; Dickens, 1994) Figure 2.3 shows the principle of a SGC technology.

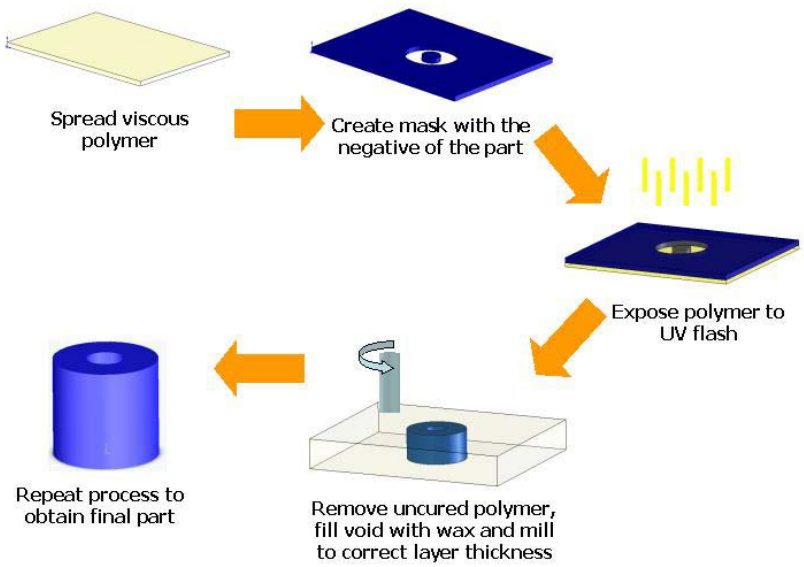

Figure 2.3. Principle of the Solider Model-making machine

Advantages of this technology are that complex shapes and structures with undercuts and overhangs can be created without solid support. Unfortunately, the process is no longer commercially available.

2.1.2.2 Powder Based

Selective Laser Sintering

This process was developed by the DTM Corporation which was subsequently acquired by 3D Systems. The process starts when a powdered material is spread over a platform using a roller-mechanism. Then, a laser traces the cross-sectional area of a layer thus sintering the powder. The roller spreads again another layer of powder and the process is repeated successively. The advantages of this process are that a wide variety of materials can be used, features such as undercuts and overhangs can be built and no post curing is required. Figure 2.4 shows a schematic view of the SLS process. Some disadvantages are the textured surface finish and porosity.

The application of SLS parts can be, depending on the material used, as prototypes, functional parts or investment and sand casing tools.

The metal parts made with this process require post-processing. The material used is metal particles coated with a polymer binder. The laser scans the powder bed thus sintering the polymer binder to form the desired part. When the part has been finished it is placed into a furnace where the polymer binder is melted and removed. The part is then sintered and infiltrated with copper or bronze.

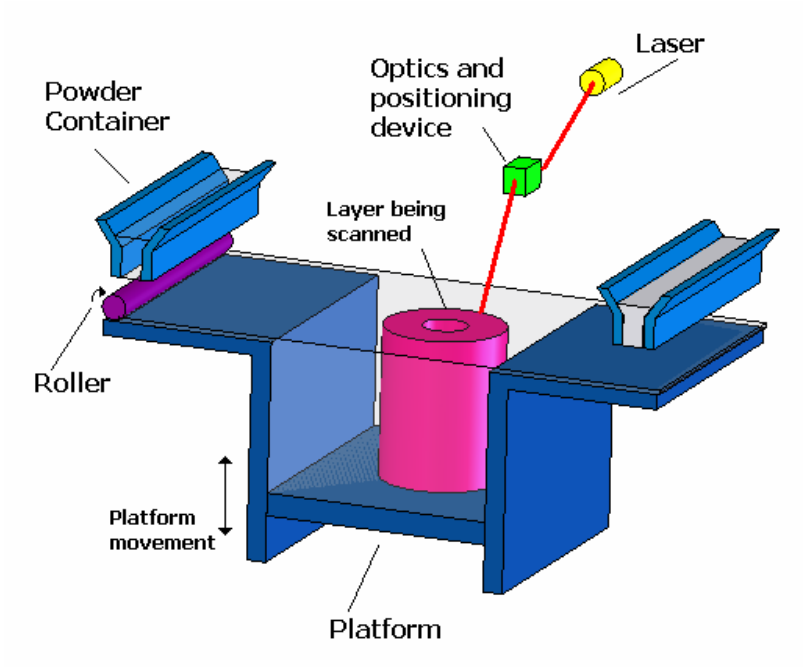

Figure 2.4. Schematic view of the SLS process

Direct Metal Laser Sintering

This technology was commercialized by EOS (Germany). Based on Selective Laser Sintering, this RP machine is used for the direct production of tooling. In this process, a 200 W laser operates directly on a mix of metal powder. The powder consists of a mixture of bronze, nickel and some other additives. The advantage of this material is that it shows very low shrinkage during the sintering process, resulting in high dimensional accuracy. After the part has been sintered, it is infiltrated with epoxy and is ready to be built into a bolster. (Radstock, 1999) Some others materials have been tested such as a mix of copper and tin to produce bronze and a steel base powder mix. (Dalgarno & Wright, 2001)

3D Printing

A printing cartridge injects a binding solution tracing the current slice of the part over a layer of powder material contained in a build chamber. The build chamber is then lowered, and a new layer of powder is spread by a roller mechanism. Figure 2.5 shows a schematic view of a 3D printer. The materials commonly used are preparations of corn starch or plaster, which makes it an economical RP technology compared to others. The parts are quite fragile, so after the part is finished, the loose powder is removed and the parts are infiltrated to improve mechanical properties. These parts are often used just as visual prototypes or disposable patterns due to their relatively poor mechanical strength.

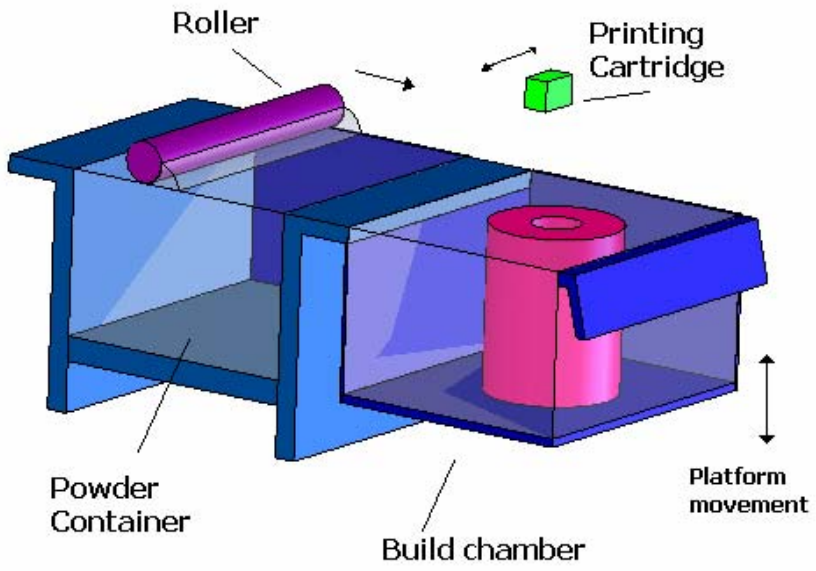

Figure 2.5. Schematic view of the 3D printing process

Electron Beam Melting

This technology was developed by Arcam (Sweden). This is a direct-metal freeform fabrication process used to build functional parts and tooling. A layer of metal powder is spread over a platform in a vacuum chamber. An electron beam gun is then used to preheat the powder layer to reduce the concentration of residual stresses that can result in part warpage. After the preheating step, the layer is selectively melted by increasing the beam power or decreasing the speed. The platform is then lowered, a new layer of powder is spread and the process is repeated until the part is complete. (Cormier et. al, 2003) Figure 2.6 shows the layout of the Arcam EBM S12 machine. The resulting part is fully dense. Finish machining is used to improve the surface finish and accuracy. Complex shapes with overhangs and undercuts can be built with this technique, and no support structures are required because the loose powder serves as support for the next layers.

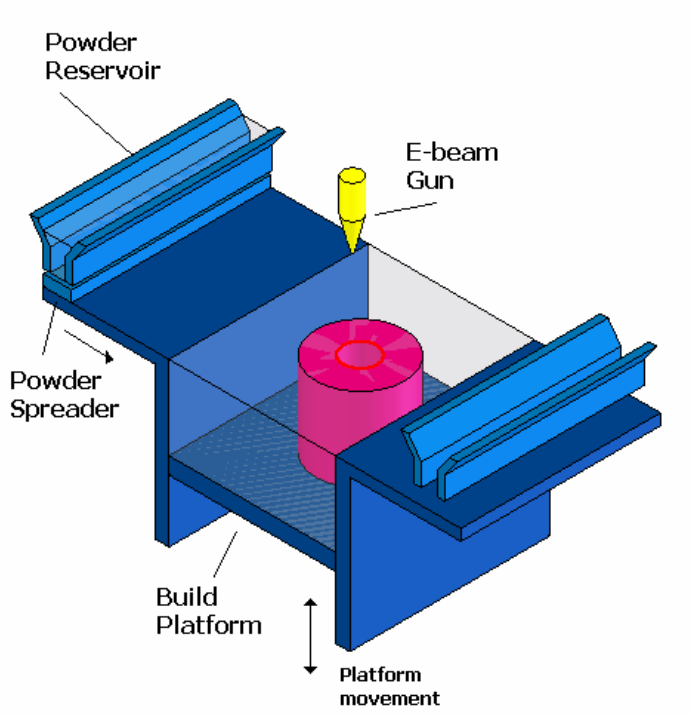

Figure 2.6. Layout of Arcam EBM S12 machine

Laser Deposition

Laser Deposition (Karapatis, Griethuysen and Glardon, 1998) is a metal powder based technique. Commercial versions of the process are offered by companies such as Optomec, Aeromet, and the POM Group. In this process, the powder is not spread but is gas-delivered to the zone of the laser beam where it draws the cross-sectional layer of the part. Almost fully dense parts can be made with this process using virtually any powdered material. One advantage is that the gas (Ar, He, etc…) protects against oxidation. A disadvantage of this process is that the geometry of the part can be limited to simple shapes due to the lack of support structures.

2.1.2.3 Solid Based

Fused Deposition Modeling (FDM)

A nozzle that moves in the X-Y direction extrudes a filament over a platform, forming a thin cross-sectional layer of the part. The platform is then lowered and the next layer is extruded on top of the previous one. A second nozzle is employed to build the support structures of the part. Once the part has been completed the support structures are broken away. There are a wide variety of materials that can be used with this technique such as ABS, elastomer, polycarbonate and investment casting wax. Some disadvantages of this process are the need of support structure and that the parts can have relatively poor strength in the vertical direction under certain conditions.

Laminated Object Manufacturing (LOM)

The LOM process is sometimes employed to make patterns for sand casting. It consists of a layer of material with an adhesive side. The layer is placed over a platform with the adhesive side facing down; a heated roller warms up the layer and therefore it adheres to the platform. A laser beam then cuts the periphery of one layer of the part; cutting through the layer of material, then, the material that does not form part of the layer is crosshatched by the laser beam. A new layer is adhered and the process is repeated until the part is finished. When the part is ready, it is removed from the platform and the crosshatched sections are removed (Upcraft 2003). Figure 2.7 shows a schematic view of the LOM process.

This is a very economic option to manufacture reusable patterns for sand casting molds. The material commonly used in this technique is paper, but there are also other options such as polyester/polyethylene-based material, ceramic-coated paper and polycarbonate composite.

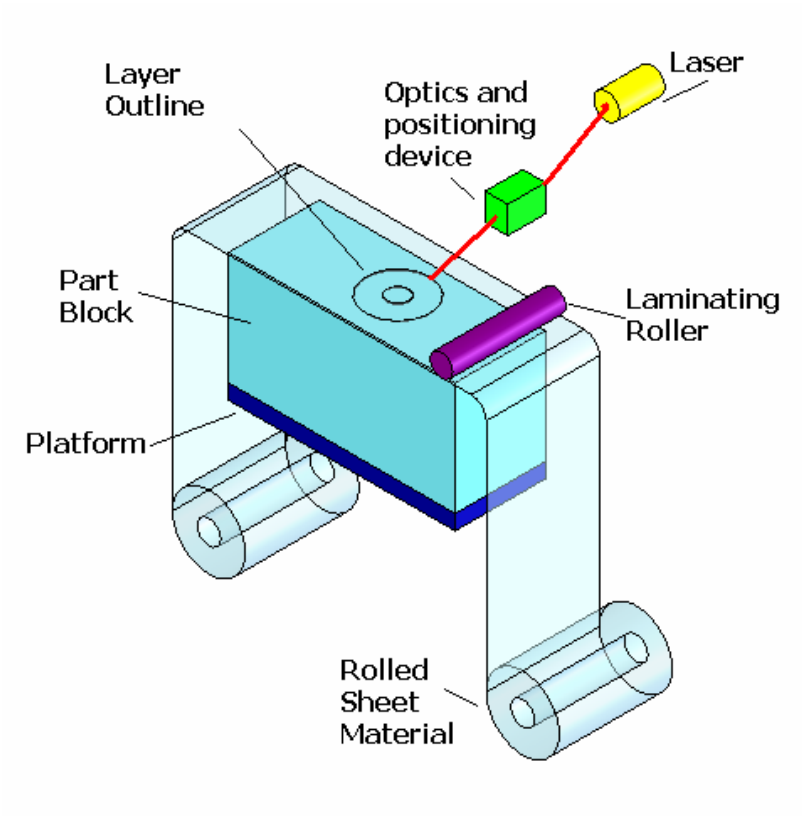

Figure 2.7. Schematic view of the LOM process

2.2 RAPID TOOLING

In today's competitive industry, a product's time-to-market plays an important roll in the success of a company. The lead-time for an injection mold is generally several weeks, but the use of Rapid Tooling reduces this time. The company is therefore in a better position to reach the market before its competitors.

Rapid Tooling (RT) is a process that allows a tool for injection molding or die casting operations to be manufactured quickly and efficiently, so the resultant part will be representative of a production part (Jacobs, 1996). RT often uses a Rapid Prototyped pattern or involves some other RP techniques in the creation of the tool.

SLA and aluminum injection molding tools were compared (Hopkinson & Dickens, 2000) to find out the differences in the process variables when using a SLA tool instead of a regular aluminum tool. Three cores were made for this experiment. One was produced in a SLA250 machine using SL5170 resin. The other two were made out of aluminum, one with a rough surface that resembles the surface of the SLA core and the other one with smooth surface. One SLA and one aluminum cavity were used with the core of the same material.

More than 50 polypropylene moldings were made and no signs of damage were present on the tools. Different processing parameters were required to inject the parts in the SLA tools. Generally, lower pressures, speed and temperature were applied.

A new RT technique called Rapid Pattern Based Powder Sintering (RPBPS) (Zhou & He, 1999) consists of positioning a pattern created by SLA in a box or frame, then a mixture of metal, ceramic or polymer is cast around the pattern, the pattern is removed and the green

compact is sintered or infiltrated. This technique offers the capability of making more complex parts in a short period of time compared to other RT techniques.

From the various RT techniques that exist on the market, three of them are relatives to the RPBPS technique: Investment Casting, Silicone Rubber and Selective Laser Sintering.

In the investment casting technique, the pattern and the gate system are made using a RP technique, then they are placed in a steel flask and the investment slurry is poured in around the pattern. When the slurry has solidified, the solid block is heated and the RP pattern is melted, leaving behind a cavity that will be used to cast metals. Some disadvantages of this technique are that the mechanical properties of the castings are limited by the low cooling rate of the mold due to the thickness and low heat conductivity of the mold.

In the silicone rubber technique the pattern is hung on a box or container and then silicone rubber is poured into the box, fully surrounding the pattern. After the rubber has solidified, it is cut along the parting line and the pattern is then removed leaving an empty cavity. Then the gating system and vents are formed using a scalpel. Since the mold is made by rubber, only low melting point materials can be molded.

In the Selective Laser Sintering process, the tool is produced without the need of a pattern; this is called 'Direct Tooling'. The part produced is sintered and infiltrated with bronze to produce the tool. The main problems with this technique are the low variety of materials available and potential issues with accuracy due to sintering shrinkage. A popular material used to make tool inserts through SLS is Copper PA. Copper PA is a metal-plastic composite that is used to build short-run tools (100-400 parts). Molds made with this material are easy

to machine and finish; cycle times of molds using Copper PA are similar to those for metal cooling.

The RapidTool ™ process is based on SLS and is used to build tool inserts. The RapidTool ™ process uses 420-stainless-steel-based particles coated with a thermoplastic binder. The green part is first produced and is then placed into an oven where the polymer binder is burnt off and the part is infiltrated with molten bronze. The final parts are 60 percent stainless steel and 40 percent bronze. These parts can be machined using any conventional method.

Selective Laser Sintering can be used to produce injection molding tools using a silicon carbide powder coated with a polymer binder. The binding material is removed and the resulting part is infiltrated with magnesium alloy (Dalgarno & Wright, 2001). Other polymer binder employed include zirconia mixed with copolymer binder, followed by debinding and infiltration with colloidal zirconia.

Also, instead of a polymer binder, a low melting point metal was used. Copper has been used as a binder for iron, and cobalt has been used as a binder for tungsten. The advantage of using non-polymeric binder is that no subsequent post-processing is required.

Laminated Object Manufacturing is used to build patterns for investment casting, sand casting and cavity molds for injection. Some disadvantages of using LOM to produce sand casting patterns are that thin-wall shell geometry and small features such as ribs or gussets are not well suited because removal of the excess material is difficult and some delamination could occur. A case study (Wang, Conley & Stoll, 1999) showed reductions of 50 percent in working time and costs compared with those obtained with aluminum tooling. To date, over

400 parts have been cast using the LOM tooling; these parts showed acceptable accuracy compared to the parts cast with aluminum tooling.

Laminated Metal Tooling (LMT) is a RT technique in which thin steel laminations are joined by an adhesive film and then cut by a laser. A steel injection mold insert has been produced using this method (Chen, Al-Alami & Zak, 2003). A significant difference in accuracy was observed between the horizontal and vertical dimensions; some height variability could easily be seen. This variation is attributed to the accumulation of debris around the cut lines. This mold insert was used to produce thirty-seven tensile specimens, and some minor delamination was observed in one spot. This process can be used to produce short-run or prototype tooling. Restrictions of this method are that there is a significant top surface height variation and that this mold should operate at low pressures to prevent delamination.

2.3 CONFORMAL COOLING

In an injection mold tool, cooling channels must be drilled so the molded part can be quickly solidified and ejected from the mold. Using Rapid Tooling, cooling channels that follow the shape of the cavity can be built within the mold. The use of conformal cooling channels will result in a reduction of the cycle time and accumulation of internal stresses.

DTM Rapid Steel (an indirect SLS process) was employed to manufacture production tooling with conformal cooling channels (Dalgarno & Stewart, 2001). The process consists of sintering of a polymer-coated steel, followed by debinding, sintering and infiltration steps. The investigation focused on the accuracy of the parts, the manufacturability of small and

unsupported features, mechanical strength and the capability of the process to generate conformal cooling channels.

Two different materials with particle size of 60 and 30 μm were tested where the material with smaller particle size showed better results as for accuracy, (+/- 0.2 mm), small features (2 mm) and the possibility to obtain more complex forms due to the flow characteristics.

The main issues that have to be considered in the generation of conformal cooling channels are the removal of loose powder from green parts, stress concentration and the porosity of the tool. For both materials, the minimum diameter of the cooling channel that could be manufactured was 5 mm, however, the recommended diameter for easy powder removal was 8 mm. It was markedly notable that more complex channels' shapes were achieved with the smaller particle size.

Different channels configurations were modeled to confirm if significant stress concentrations happened as a result. The main finding of this study was that as long as a circular channel is separated from an adjacent channel by at least a channel diameter, and it was at least a diameter from the tool surface, then no adverse stress concentrations would exist. Regarding the porosity, to assure that the cooling fluid would remain confined to the channels, the part was infiltrated with a high temperature resin to seal the tool surfaces.

Die cast tools have been produced using Rapid Tooling via the Rapid Laminated Method (Gibbons et al. 2003). The extent of the study covered the selection of materials, joining and machining methods as well as the effect of conformal cooling channels on the efficiency of the process. The material selected was H13, a hot work steel; joined with AMDRY 936, a Ni-Mn-Si-B-Cu-Re high temperature braze material.

The conformal cooling channels were designed into an insert, following the runner system and biscuit area. It was shown that conformal cooling channels improved the productivity by 11 percent. The laminated insert presented failure due to delamination in the cooling channels after 450 casts.

Two electroformed nickel tools with conformal cooling channels were compared with a conventional mold made out of H-13 steel (Jacobs, 1999). The conformal cooling channels were fully encapsulated in copper, a material with excellent thermal conductivity. Two mold inserts, backed with aluminum filled epoxy were produced.

For the first tool, after the temperature stabilized and the injection parameters were optimized, the cycle time for the mold was 12 seconds. For the H-13 steel mold, after temperature stabilization and optimization of the parameters, the cycle time was 21 seconds. This is an increase of 75% in the productivity of the mold as a direct effect of using highly thermal conductive materials and conformal cooling channels. For the second tool, the cycle time after stabilization and optimization was 9 seconds whereas the H-13 mold cycle time was 15 seconds, resulting in an increase of 67% in the productivity.

2.4 COMPARING CONVENTIONAL AND CONFORMAL COOLING CHANNELS

For this research, it was of interest to analytically compare molds built with either conventional or conformal cooling channels. To do this, a heat transfer software package called FEMLAB (www.comsol.com) was employed to compare the effect of two different configurations of cooling channels on the heat dissipation of a mold.

FEMLAB is a multiphysics software package that includes a heat transfer module capable of solving problems involving any combination of convection, conduction and radiation heat transfer.

The simulation was run in the bottom part of two injection mold models - one with conventional cooling channels and the second one with conformal cooling channels. Figure 2.8 shows the two mold designs used in the heat transfer simulation.

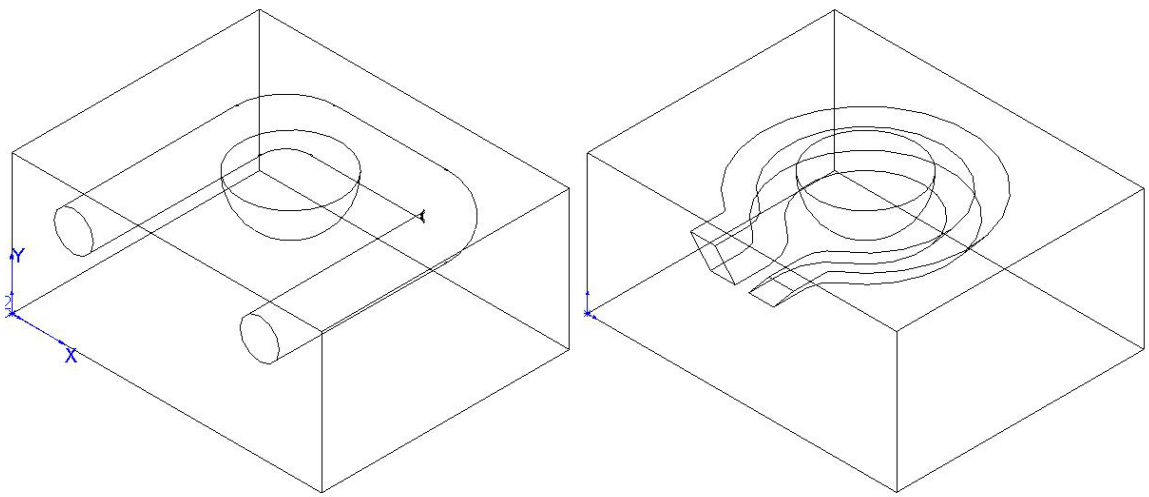

Figure 2.8. Wire frame view of the molds with conventional (left) and conformal cooling channels

Within FEMLAB it is possible to select from a database the materials that are used in the study. The mold material is set to steel 3140 with an initial temperature of 473 K. The temperature of the internal walls is set to 293 K. The heat is removed by convection from the internal walls to the air in the empty channels. Water flow is not considered in an attempt to simplify the model and is not necessary since the aim was simply to compare the efficiency of the channels regardless of the cooling medium.

Several screenshots were captured to show the thermal gradient in both molds. Figure 2.9 and Figure 2.10 show images corresponding to the top view of the molds at 0.5, 1, 2, 3 and 5 seconds.

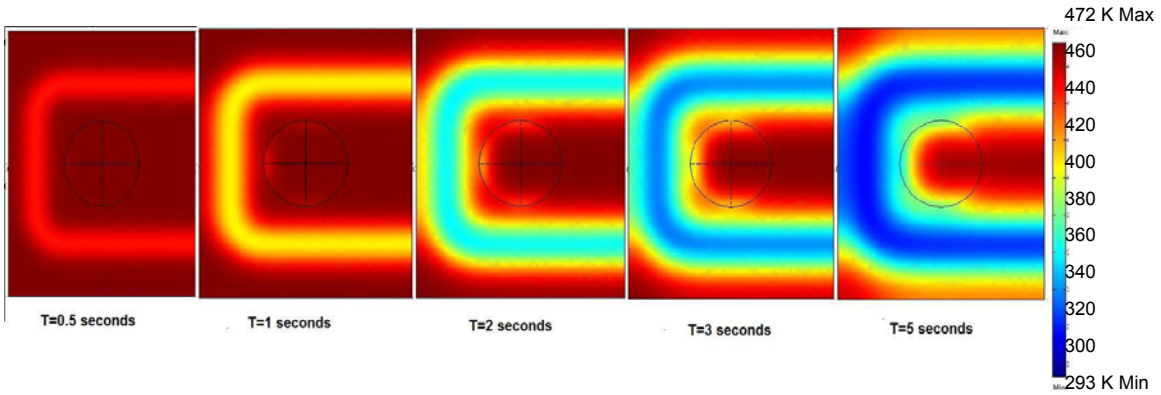

Figure 2.9. Top view of thermal gradient in mold with conventional cooling channels

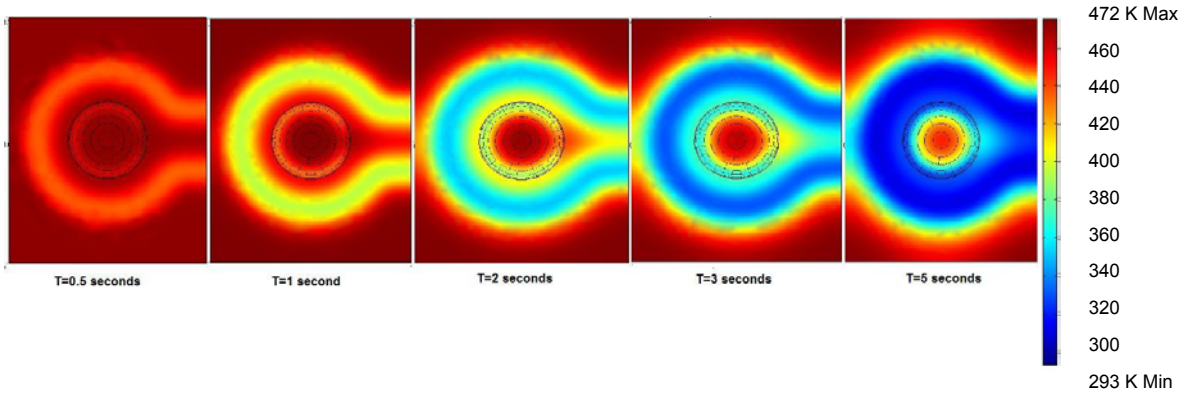

Figure 2.10. Top view of thermal gradient in mold with conformal cooling channels

In Figure 2.9 at time 0.5 the temperature of the channel is around 450 K while in figure 2.10, at the same time, the temperature has already reached the range of 430's K. Within the first three seconds of the simulation, it can be clearly observed that the cooling of the mold with

conformal channels is more even. After 5 seconds, the temperature apparently is the same in both molds.

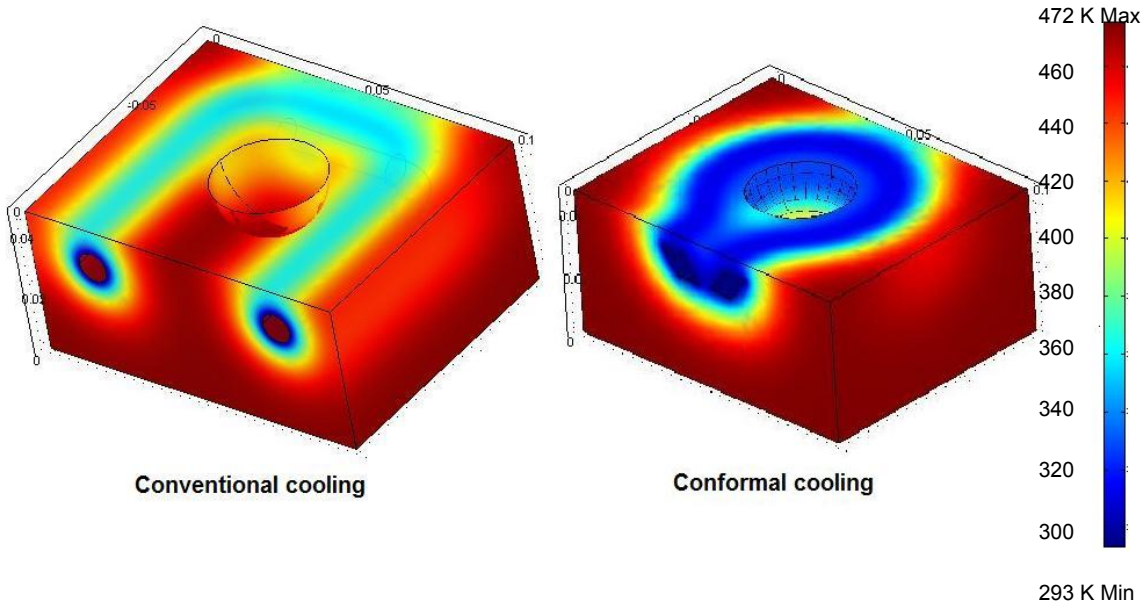

Figure 2.11. Isometric view of thermal gradient

Figure 2.11 shows an isometric view of both molds. The positive effect of conformal cooling channels is more evident here. It is clearly observed that still after 5 seconds; the mold with conformal cooling channels presents a more efficient cooling since the temperature has already reached the range of approximately 320 degrees Kelvin.

2.5 RAPID TOOLING AND ELECTRON BEAM MELTING TECHNOLOGY

With the EBM machine, fully solid parts can be manufactured from different materials like titanium or hardened tool steel to produce final application parts or injection molding tools. After the part has been completed, it can be machined with conventional methods and polished to attain the required finish properties.

Since the tool produced with this technique is made out of solid H-13 tool steel, it offers the same durability as any other mold manufactured with the conventional methods. Furthermore, it meets or surpasses the life expectancy molds produced via most other RT techniques.

Conformal cooling channels can be included in the design of the mold and manufactured with this technique to achieve shorter cycle times and better quality in the injected part.

2.6 PROBLEM STATEMENT

From the literature review, we can observe that several investigations have been conducted involving Rapid Tooling with conformal cooling channels. However, the resulting tools are often porous or can suffer from delamination after a certain number of runs, leading to a short tool life that cannot be compared to the tool life of a tool manufactured in the conventional way.

Electron Beam Melting is a promising new technology that produces fully dense H13 steel parts comparable to those made by conventional methods. A challenge with the EBM process is that loose powder must be cleaned out of the cooling channels. The down facing surfaces of the parts produced with this technology present so-called icicles that make this difficult. The objectives of this work are to determine how icicles can be reduced and to determine the most appropriate cooling channel geometry given the process capabilities. The process of EBM will be described with more detail in the next chapter.

3. ELECTRON BEAM MELTING

3.1 ELECTRON BEAM PROCESSING

Electron-beam processing is defined as a technique which changes the shape or properties of a material or workpiece by the use of electron beams (Taniguchi et. al, 1989). Several applications of electron beam processing can be found in the literature such as: melting, machining, welding, annealing, polymerization and depolymerization, etc.

Electron-beam processing uses a focused electron beam of high voltage ranging from 5kV to as many as 150kV that operates under high vacuum on the order of $10^{-2} – 10^{-4}$ Pa.

Electron beam melting is a processing technique that has been used over the past years to melt and cast different types of metals such as steel, titanium, tantalum, etc.

In an electron beam furnace, the material is deposited into the melt chamber either as stock, pellets or scrap., The material is then bombarded by a high voltage electron beam. When the electrons strike the surface of the material, their kinetic energy is converted to heat, which melts the stock material that drips into the pool of the crystallizer.

When the electron beam strikes the surface, most of the electrons are reflected and very few are absorbed by the workpiece. The electrons that are absorbed scatter along the workpiece; consequently some atoms are heated by conduction from the surface layer and not directly by the beam.

3.1.1 EBM Machine

The EBM machine uses this same principle to selectively melt metal powder to obtain a solid part. The system mainly comprises of a control computer, an electron beam gun and a vacuum chamber where the object is created. Figure 3.1 shows the parts of the system.

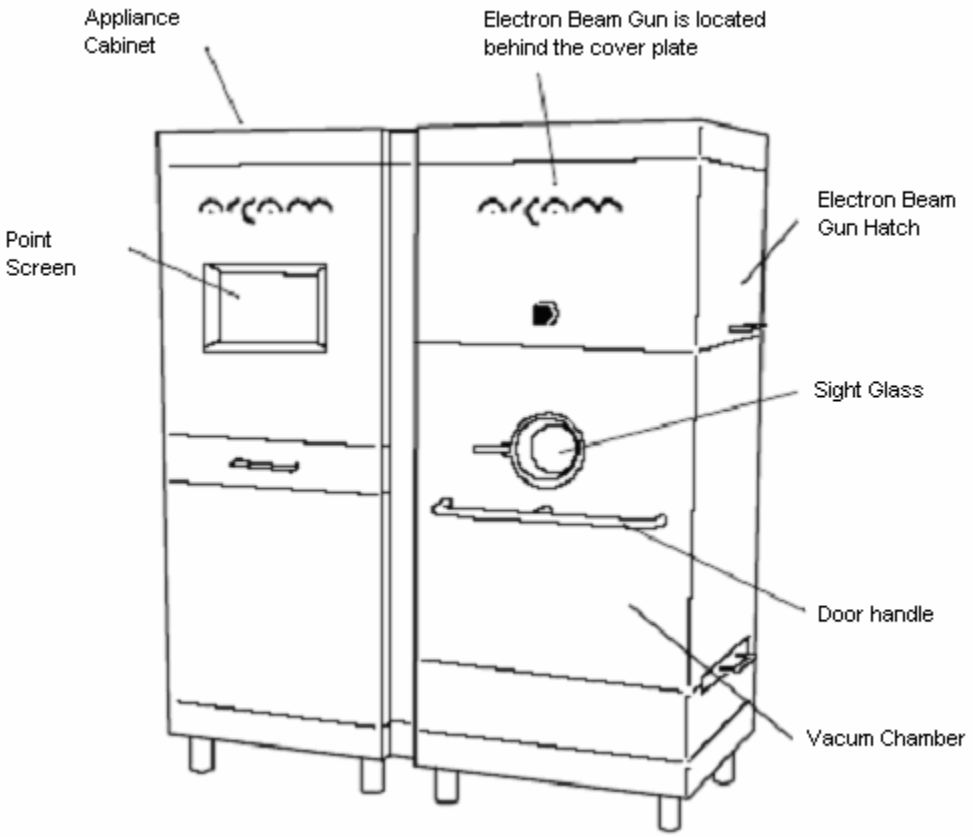

Figure 3.1. Arcam EBM S12 System (Courtesy of Arcam)

The Control Computer

In the control computer, the software Arcam EBM Studio is used to set up the desired parameters of the electron beam. It also retrieves information from the SLC file to calculate the time and current required to produce the part. Numerous settings can be changed within the Arcam EBM Studio to achieve the desired behavior of the beam. Some of these settings are: beam speed, beam current, beam maximum current, beam offset (defined as the distance between each scan). All these settings differ in the preheating, post heating and melting processes.

Before the melting process occurs, the current layer is preheated to sinter the powder to the surface. Preheating is achieved by scanning the surface at very high speeds and/or low current. Post heating is an optional process that follows the preheating step. It can be used to create sections of the part with different characteristics like porous or partially melted regions.

Melting takes place after the post heating step; for the purpose of reducing internal stresses and warpage in the final part, each layer is divided into contours and squares. After the contours have been melted, the remaining area is subdivided by means of the software into squares that are randomly melted by the electron beam gun (Cormier et. al, 2003). The Arcam EBM Studio software can select from different algorithms previously created or set new values for the size of the squares, the number of contours, the square and contour offset and the choice of pre-heating or post-heating among other parameters.

The Vacuum Chamber

The main parts of the vacuum chamber are the build tank, the metal powder dosing feeder and the metal powder carriage. The build tank is where the object is created and the build platform can be moved along the z-axis by means of a ball roller screw and can be locked at a certain height by means of a locking wedge. The powder dosing feeder is connected to the powder container and it deposits a measured quantity of powder into the build tank. After this, the powder carriage evenly distributes the powder to a thin layer. Figure 3.2 shows the parts of the vacuum chamber.

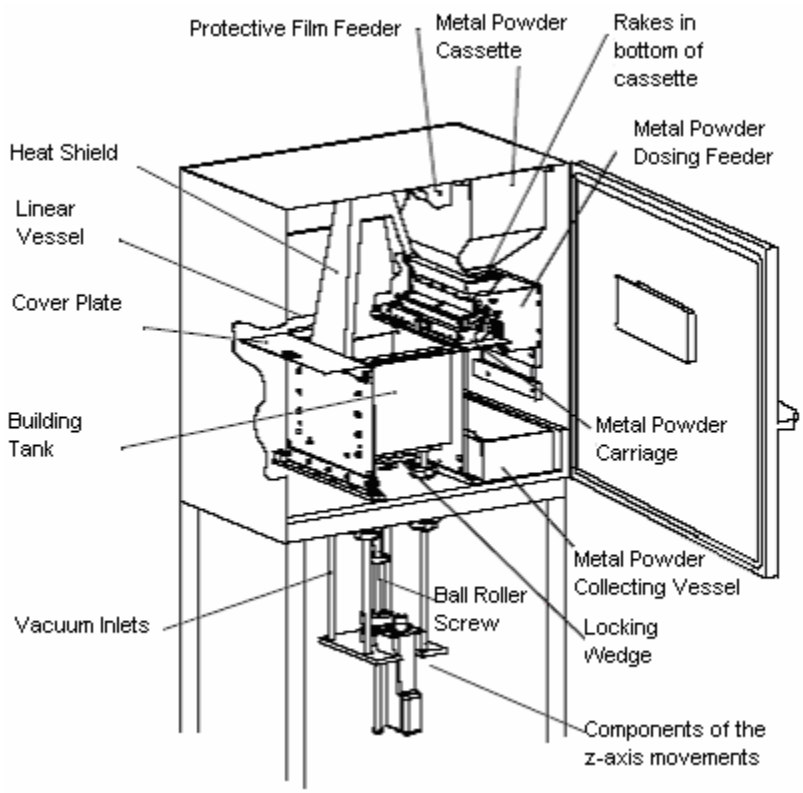

Figure 3.2. Parts of the Vacuum Chamber (Courtesy of Arcam)

Electron Beam Gun

The electron beam is generated in the Electron Beam Gun when a filament current passes through a wolfram or tantalum filament. When the current is applied, the filament heats up and starts emitting electrons. The electrons are accelerated applying high voltage (60kV) between the filament and the anode. The control electrode is used to regulate the current of the beam. The electron beam is then focused by means of a focusing coil. When the electrons hit the powder surface, their kinetic energy is transformed into thermal energy; reaching the metal's melting temperature. The electron beam is actuated by means of deflection coils using a magnetic field to steer the beam to the desired position to scan the metal powder. Figure 3.3 shows the parts of the electron beam gun.

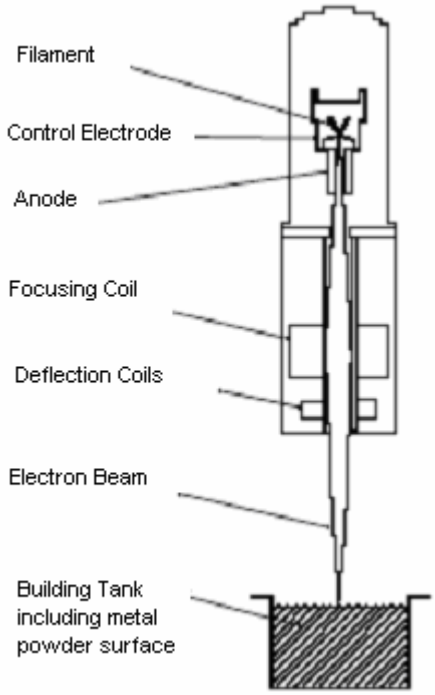

Figure 3.3. Parts of the Electron Beam Gun (Courtesy of Arcam)

The amount of electrons discharged depends on the beam current and the beam speed. This factor is called current density and its calculation and units are described below:

The beam has a diameter of approximately 0.1 mm, so every time the beam scans a region the scanned area is the addition of the beam's projected area and the distance from the starting point to the end point (determined by the beam's speed) times the beam's diameter. Figure 3.4 illustrates how to calculate the scanned area.

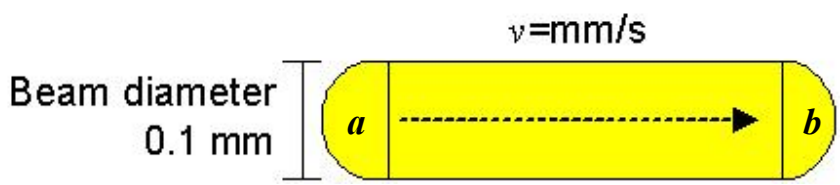

Figure 3.4. Calculation of scanned area

The calculation of the charge density is explained below. Note that the speed (***v***) units are mm/s and the current units are coulombs/second.

The amount of charge *C* (coulombs), applied to the powder bed by the beam in *t* seconds is given by:

$$C = i \bullet t$$

Likewise, the area A_s (mm^2) scanned by the beam in *t* seconds is given by:

$$A_s = \pi r^2 + v_s t D$$

Combining these two equations, the charge in coulombs that is applied to each square millimeter of powder bed area in *t* seconds is therefore:

$$\text{Charge Density} = \frac{i \bullet t}{\pi r^2 + v_s t D} \text{ coulombs/mm}^2$$

where:

i = current (amps = coulombs/sec)

r = beam radius (approx. 0.05 mm)

V_s = beam scan velocity (mm/sec)

D = beam diameter (approx. 0.1 mm)

Example:

Suppose a 0.1 mm diameter 8 mA beam traveling at 800 mm/sec is scanned over a powder bed for 1 second. The current density will therefore be:

$$\text{Charge Density} = \frac{0.008 \bullet 1}{\pi(0.05)^2 + 800 \bullet 1 \bullet 0.1} \approx 0.0001 \text{ coulombs/mm}^2$$

Figure 3.5 shows the charge density (coulombs/mm^2) plotted as a function of beam current for two different beam scan speeds (400 and 800 mm/sec^2). If one picks a particular current density and scans horizontally across, the beam current that provides that charge density can be located for the two scan speeds. From this graph, it can be seen that a specific charge density can be attained either in a short or long time lapse depending on the speed and current of the beam. Put another way, the same amount of heat per unit area can be applied faster or slower depending on scan speed. For example, if one wishes to apply a charge density of 0.0002 coulombs/sec^2, he/she can apply a current of 8 mA using a speed of 400 mm/sec, or he/she can apply a current of 16 mA using a speed of 800 mm/sec. The significance of this will become apparent in subsequent sections of this document.

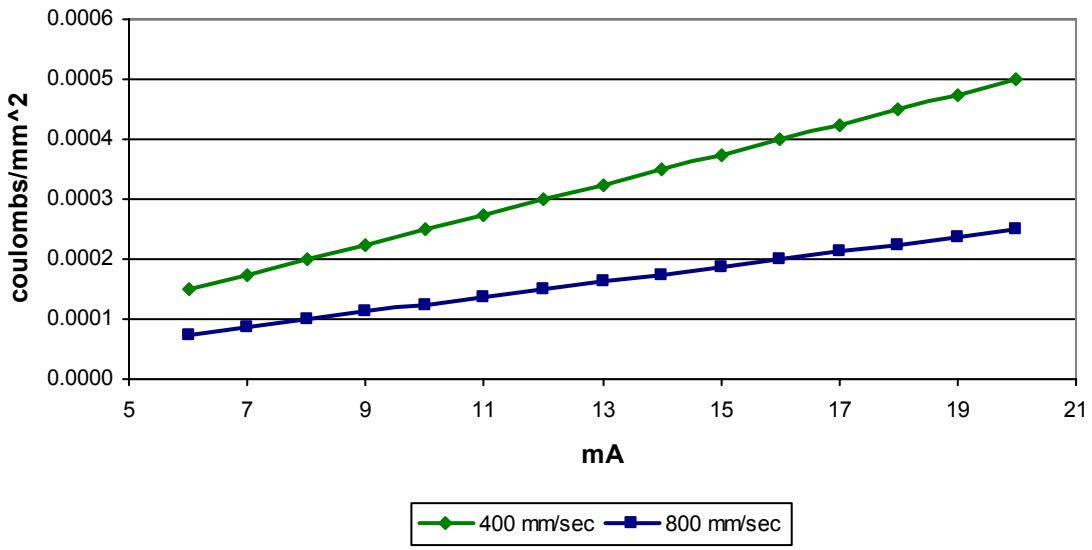

Figure 3.5. Electric density vs. current

3.2 MAKING STEEL PARTS WITH DOWN FACING SURFACES USING EBM TECHNOLOGY

When the electron beam impinges upon a layer of powder, the kinetic energy of the electrons is transformed into heat that melts the powder. The layer previously scanned usually serves as a rigid support for the next layer. When the part has a feature such as an undercut (i.e. a downward-facing surface), the layer of powder does not have a rigid support beneath it. Thus when the electron beam strikes the surface, it penetrates the powder creating icicles. Figure 3.6 shows an example of a down-facing surface.

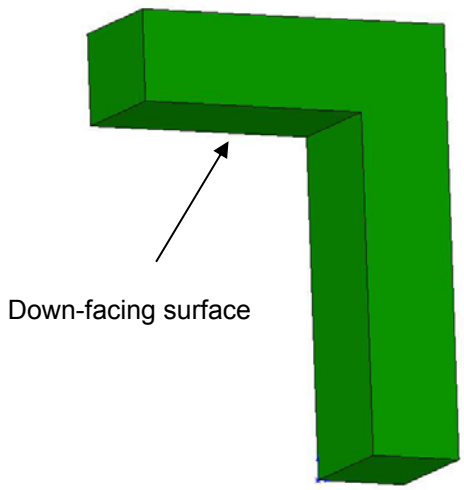

Figure 3.6. Illustration of a down-facing surface

Conformal cooling channels are examples of geometric features that possess non-rigidly supported down-facing surfaces. The unmelted powder inside the channels becomes lightly sintered during the EBM process and must be cleaned out with the aid of a flexible braided wire connected to a manual drill.

3.3 PROBLEM DESCRIPTION

During preliminary experimentation with the EBM process, it was found that the down-facing surfaces of the conformal cooling channels possessed icicles and a rougher surface. These icicles were obstructing the powder removal and cleaning of the channels.

EBM is an excellent alternative to make molds with conformal cooling channels. However, this process presents some limitations such as the appearance of icicles in down-facing surfaces that impede the powder removal. These problems have not been formally studied.

4. METHODOLOGY

4.1 REDUCTION OF ICICLES VIA PARTIALLY MELTED SUPPORTS

It is hypothesized that partially melting the lose powder that is under the down facing surfaces would provide a structure firm enough to serve as support, yet, easy to remove and clean. While the preheating function is used to slightly sinter the powder to the surface so it will not be blown away when hit by the electron beam, a secondary heating or post heating can be used to selectively heat or partially melt a different region than the area that is being melted. This approach was shown to work well for titanium, but it had never been attempted for steel. The methodology to find the optimal post heating parameters is explained below.

A test part shown in Figure 4.1 was created in Solidworks to evaluate different post heating parameters. This part allows up to four different parameter sets to be tested per build helping to minimize the set-up time per build.

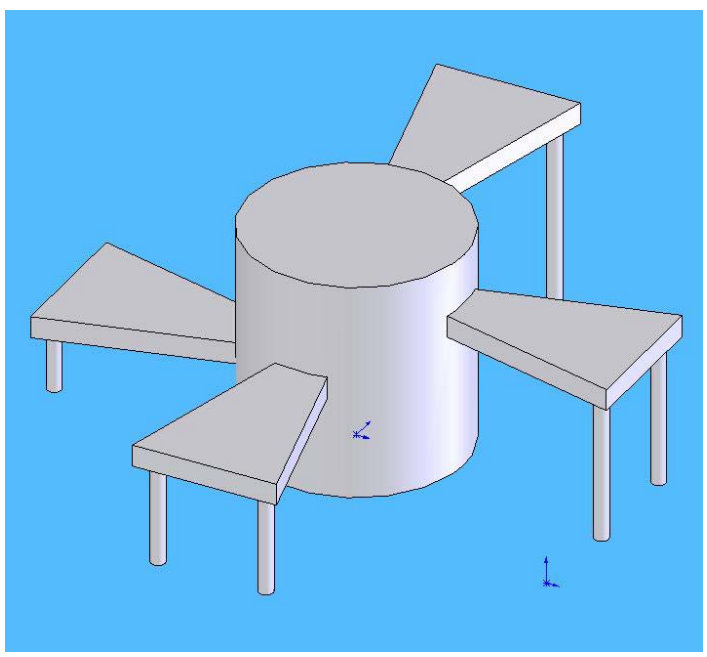

Figure 4.1. Test part used to find optimal post-heating parameters

This file is used by the Arcam Studio software during the melting process while the preheating file is only a copy of the melting file. Now we are only left with the task to create the post heating file.

Two different types of post heating files were used to observe the effects of different parameter settings on the final parts. The first post heating file is a Boolean subtraction of the melt file and a cylinder that is slightly larger in diameter than the part file. The second file is the projected shadow of the melting file. Figure 4.2 shows the SCL files used in the experiment.

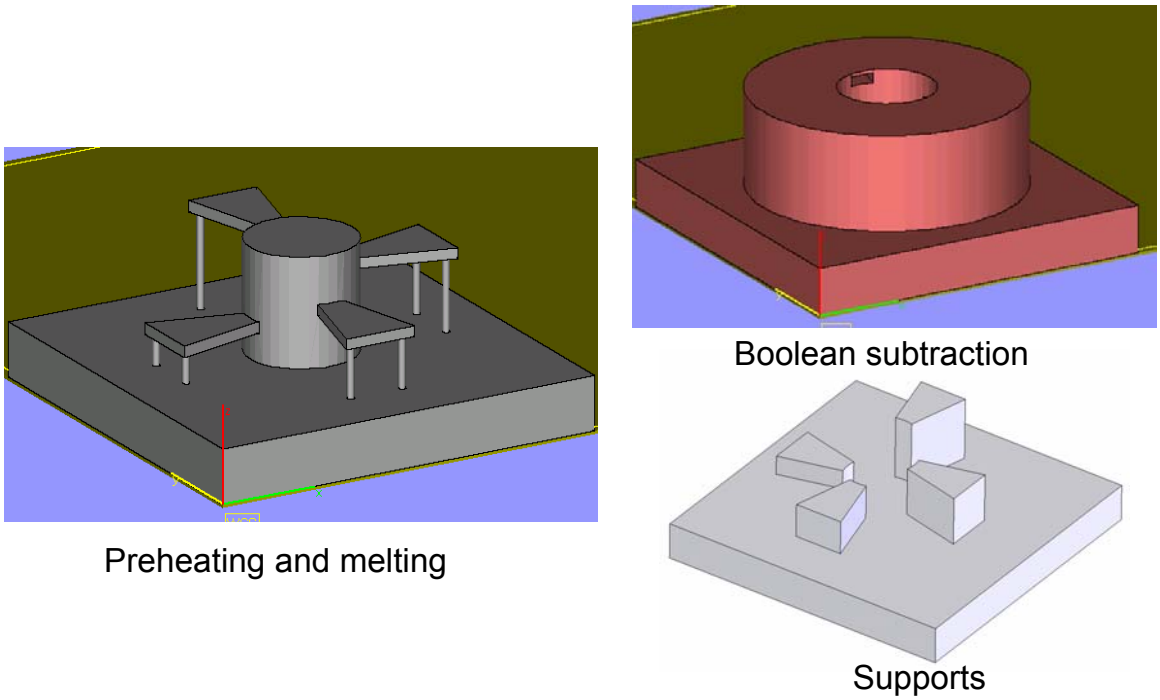

Figure 4.2. SLC files of the test part

The files are transferred to the EBM control computer and the algorithm and process settings for the preheating and melting processes are selected from the pre-defined theme for H-13 steel. During processing settings that are most commonly changed from build to build are:

number of passes, speed, current and beam offset. The way each one of these settings affect the process is described below:

Number of passes: This is the number of times the beam is scanned over the selected area of interest. Increasing the number of passes will increase the amount of heat input to the powder.

Beam speed – This is the velocity with which the beam is scanned over the powder bed.

Beam current – this is the current (mA) of the beam. The accelerating voltage is fixed at 60 kV, hence the resulting beam power (watts) for a given current setting is 60*i*, where *i* is given in mA.

Beam offset - The beam offset is the center-to-center distance between adjacent scans of the beam. Every time the beam impinges upon the surface, it melts a circular area (called melt pool) with a diameter of approximately 1.2 mm. Therefore, a beam offset of 1.2 mm means that the scans will not overlap. If the beam offset overlaps, more heat would be applied to the powder.

During the preheating step, low current and high speeds are employed to heat the powder without melting it. During the melting step, this relationship is reversed. Several experiments were carried out to find the effect of post heating on the surface roughness of the down facing surfaces. The results of the experiments are explained in chapter five.

4.2 DETERMINATION OF CHANNEL WIDTH AND CURVATURE

As a practical consideration, it is important to determine the minimum width of the channels that can be made when using the EBM. A test part with seven channels having widths that vary from 1mm to 7mm was created with the EBM machine. Figure 4.3 shows the test part used in this experiment.

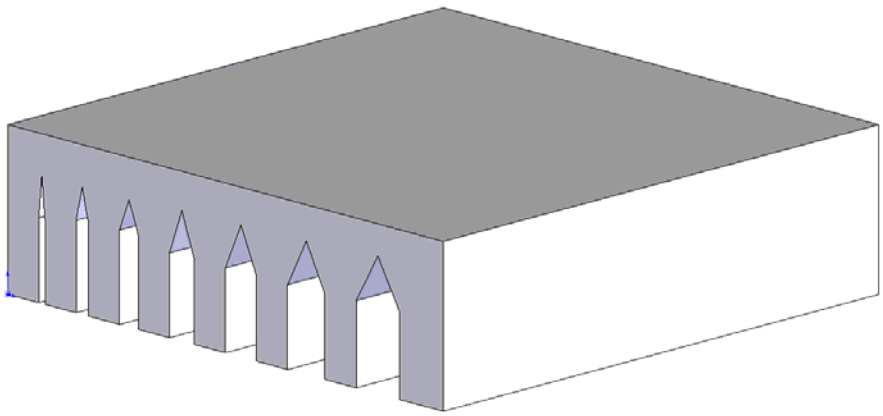

Figure 4.3. CAD Model of part used to find minimum channel width

The powder trapped in internal cavities is not easy to remove. If the cleaning media (braided wire) has to follow a curved path such a cooling channel, it is even more difficult to remove. The smaller the radius is, the more difficult it becomes for the wire to turn the corner. A CAD model created to test the limits on cooling channel radius is illustrated in Figure 4.4.

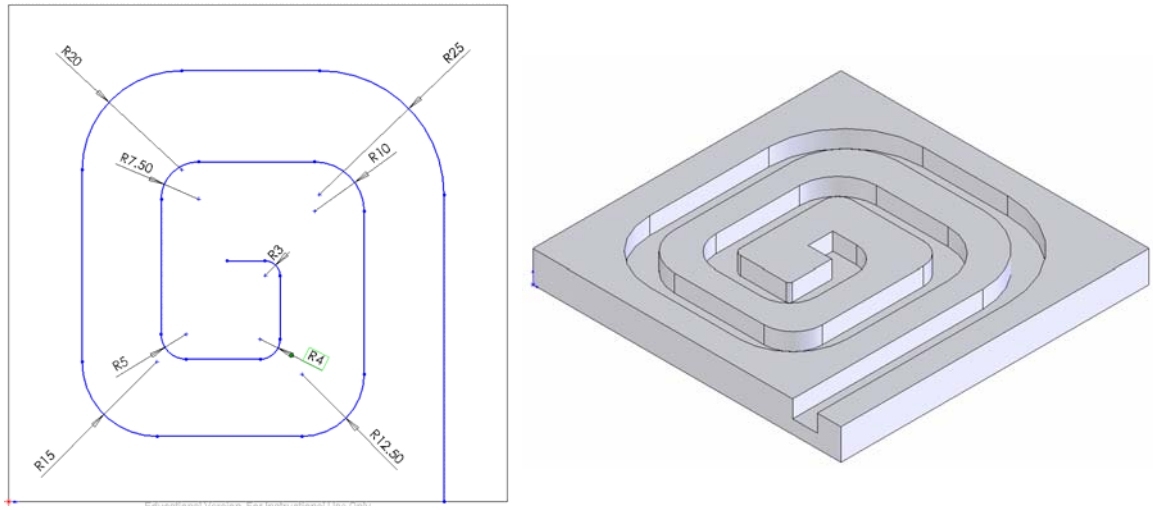

Figure 4.4. CAD model of part used to find minimum curvature radius

The radii tested were 25mm, 20mm, 15mm, 12.5mm, 10mm, 7.5mm, 5mm, 4mm and 3 mm. A plate of transparent acrylic was clamped on top of the part to observe at what diameter it is not longer possible for the braided wire to go through.

4.3 COOLING CHANNEL GEOMETRY

It is well known that the larger the surface area of the cooling channel, the better the heat will flow from the mold to the water. Circular channels are not the most effective geometry to remove heat from the mold. Because the cooling channels in EBM tools are not produced with round drill bits, alternative geometric shapes may be introduced. It is recommended to have polygonal channels to improve the heat removal. Polygonal channels have a larger surface area and they can be inclined towards the cavity to achieve a constant distance from the surface being cooled. Figure 4.5 illustrates a mold with the proposed channel geometry.

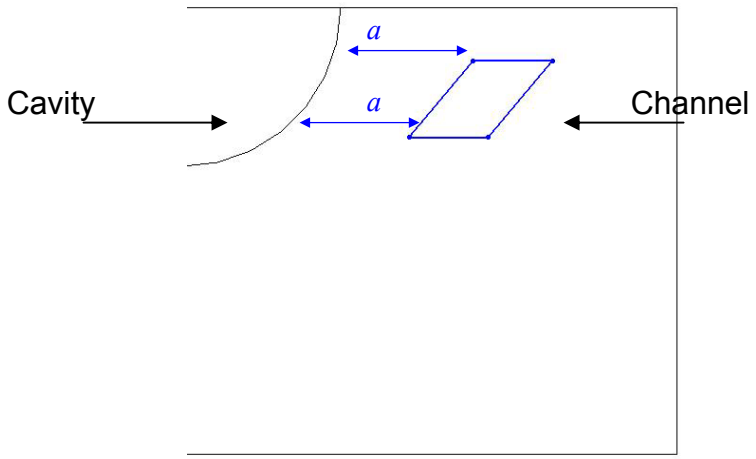

Figure 4.5. Front view of a mold with the proposed channel geometry

5. RESULTS AND DISCUSSION

5.1 ICICLE EXPERIMENTATION RESULTS

Several experiments were carried out to observe the effect of five main indicators on the down facing surfaces. These indicators are:

- Number of passes
- Beam speed
- Beam current
- Beam offset
- File type

Experiment #1

In this experiment, the parameter changed was the current. Table 5.1 shows the settings used and the results are illustrated in Figure 5.1.

Table 5.1. Parameters used in 1st experiment

	1	**2**
# of passes	10	10
Speed (mm/s)	5,000	5,000
Current (mA)	4	8
Beam Offset (mm)	1.2	1.2
File type	Boolean subtraction	Boolean subtraction

1st Set 2nd Set

Figure 5.1. Results of the first experiment

Due to mechanical problems with the machine, only two steps were built. After the part was cleaned, it was easily observed that these settings were not adequate and the supports could not hold the molten platform.

Experiment #2

This experiment was a continuation of experiment #1. The combination of settings that were used by the machine when it failed was tried again. Once again, only one step was built due to a mechanical failure. It can be seen that the down facing surface is practically attached to the start plate. These settings were clearly not adequate. Table 5.2 shows the settings used and the results are illustrated in Figure 5.2.

Table 5.2. Parameters used in 2nd experiment

	1
# of passes	10
Speed (mm/s)	5,000
Current (mA)	8
Beam Offset (mm)	1.2
File type	Boolean subtraction

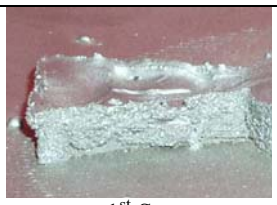

1st Set

Figure 5.2. Results of the second experiment

Experiment # 3

In this experiment, the number of passes, the speed and current were the parameters changed. Table 3 shows the different sets of values used. The settings were not adequate, as the first step was practically melted to the start plate and the next steps have fairly big icicles. Table 5.3 shows the settings used and the results are illustrated in Figure 5.3.

Table 5.3. Parameters used in 3rd experiment

	1	2	3	4
# of passes	1	1	5	20
Speed (mm/s)	10,000	8,000	10,000	20,000
Current (mA)	20	25	10	6
Beam Offset (mm)	1.2	1.2	1.2	1.2
File type	Boolean subtraction	Boolean subtraction	Boolean subtraction	Boolean subtraction

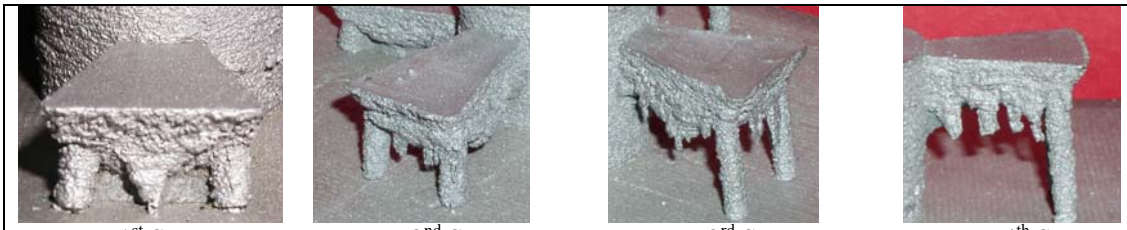

1st Set 2nd Set 3rd Set 4th Set

Figure 5.3. Results of the third experiment

Experiment # 4

In this experiment the speed and current were the parameters changed. Although the icicles are not as big as the ones in the 3rd experiment, the down facing surfaces are uneven and considerably thicker than they should be. Table 5.4 shows the settings used and the results are illustrated in Figure 5.4.

Table 5.4. Parameters used in 4th experiment

	1	2	3	4
# of passes	10	10	10	10
Speed (mm/s)	10,000	8,000	8,000	6,000
Current (mA)	4	8	10	10
Beam Offset (mm)	1.2	1.2	1.2	1.2
File type	Boolean subtraction	Boolean subtraction	Boolean subtraction	Boolean subtraction

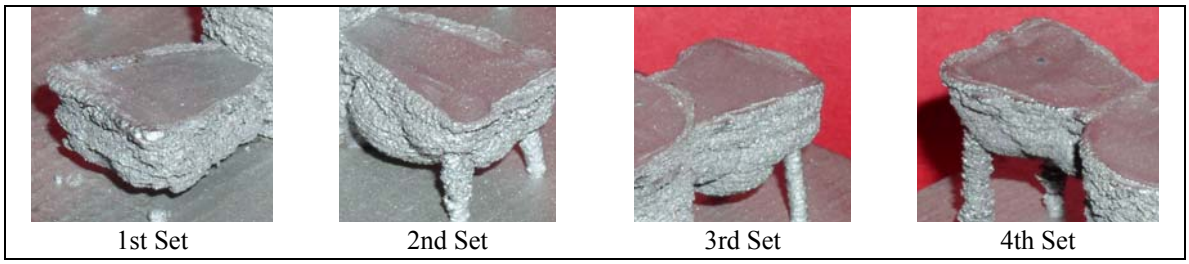

Figure 5.4. Results of the fourth experiment

Experiment # 5

In this experiment a different post heating file was used to see if it had an impact on the formation of icicles. The beam offset was reduced to 0.9 mm to create thin straps. Intuitively, these straps would provide additional support to the molten platform. In Figure 5.5 it can be observed that by making these two changes the powder underneath the platforms was completely melted. Table 5.5 contains the parameters used in this experiment

Table 5.5. Parameters used in 5th experiment

	1	2	3	4
# of passes	10	10	15	15
Speed (mm/s)	6,000	6,000	6,000	6,000
Current (mA)	10	10	10	8
Beam Offset (mm)	1.2	0.9	0.9	0.9
File type	Supports	Supports	Supports	Supports

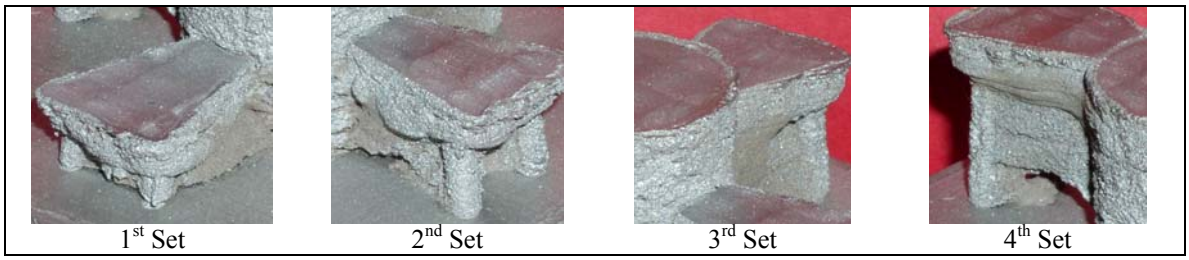

Figure 5.5. Results of the fifth experiment

Experiment # 6

In this experiment the number of passes was decreased and the speed was increased to apply less heat and avoid melting of the powder underneath the platforms. A mechanical failure occurred while the second platform was being built. The results obtained were unsatisfactory. Table 5.6 shows the settings used and the results are illustrated in Figure 5.6.

Table 5.6. Parameters used in 6th experiment

	1	2
# of passes	1	1
Speed (mm/s)	10,000	10,000
Current (mA)	20	20
Beam Offset (mm)	1.2	0.9
File type	Supports	Supports

1st Set 2nd Set

Figure 5.6. Results of the sixth experiment

Experiment # 7

This experiment was a continuation of experiment #6. The current was slightly decreased and the beam offset was switched back to 1.2 mm. A mechanical failure occurred within the first layers of the build. Table 5.7 shows the settings used and the results are illustrated in Figure 5.7.

Table 5.7. Parameters used in 7th experiment

	1
# of passes	1
Speed (mm/s)	10,000
Current (mA)	15
Beam Offset (mm)	1.2
File type	Supports

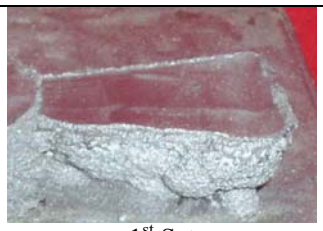

1st Set

Figure 5.7. Results of seventh experiment

Experiment #8

In this experiment, the speed was decreased and the number of passes increased to obtain a firmer support structure. A mechanical failure occurred during the second platform. Table 5.8 shows the settings used and the results are illustrated in Figure 5.8. It can be observed that the results were unsatisfactory.

Table 5.8. Parameters used in 8th experiment

	1	2
# of passes	3	3
Speed (mm/s)	10,000	8,000
Current (mA)	15	15
Beam Offset (mm)	0.9	0.9
File type	Supports	Supports

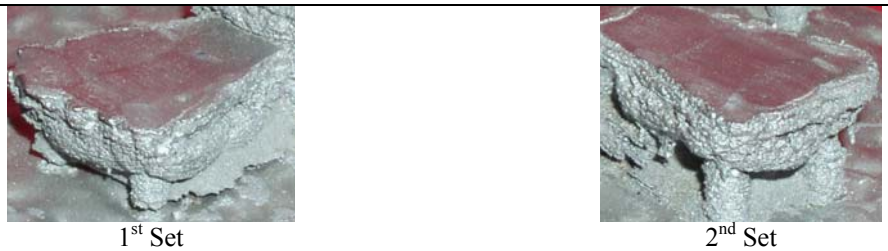

1st Set 2nd Set

Figure 5.8. Results of the eighth experiment

Experiment #9

The file type was switched back to Boolean operation. The number of passes and the current were increased and the speed decreased. The powder surrounding the 4th platform was partially melted creating a very rigid structure. This structure didn't prevent the platform from showing a very poor down-facing surface. Table 5.9 shows the settings used and the results are illustrated in Figure 5.9.

Table 5.9. Parameters used in 9th experiment

	1	2	3	4
# of passes	10	10	15	20
Speed (mm/s)	8,000	8,000	8,000	6,000
Current (mA)	10	15	15	15
Beam Offset (mm)	0.9	0.9	0.9	0.9
File type	Boolean subtraction	Boolean subtraction	Boolean subtraction	Boolean subtraction

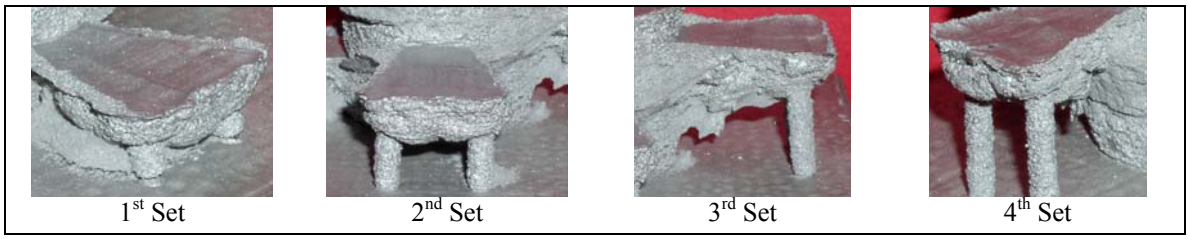

Figure 5.9. Results of the ninth experiment

From the images above it can be observed that all nine experiments presented poor down facing surfaces. The post heating settings used on the 4th step of the 9th experiment partially melted the powder underneath the step, creating a very hard structure but this didn't help to attain a smooth surface.

Therefore, it can only be concluded that sintered supports are of little or no help in the creation of down facing surfaces without icicles – at least within the range of parameters studied here. As an alternative approach, it is recommend that alternative channel geometries be used that minimize icicles. A mold core shown in Figure 37 with a conformal cooling channel is used to illustrate the appearance of icicles. In this case, the geometry of the channel is a square and it has a uniform cross-section along the channel. Figure 5.10 shows the mold core with conformal cooling channel.

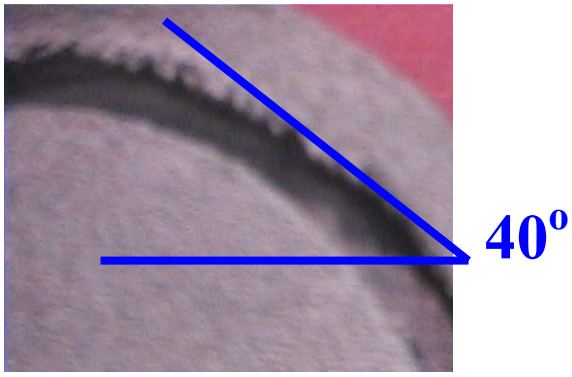

Figure 5.10. Mold with conformal cooling channel

From this figure, it can be seen that icicles start to appear when the channel slope reaches approximately 40° and, as expected, worsen when the slope increases beyond approximately 40°. To prevent icicles that make powder cleaning difficult, it is therefore recommended that channels having sloped down-facing surface with an inclination of at least 40°be used. Figure 5.11 shows the proposed geometry.

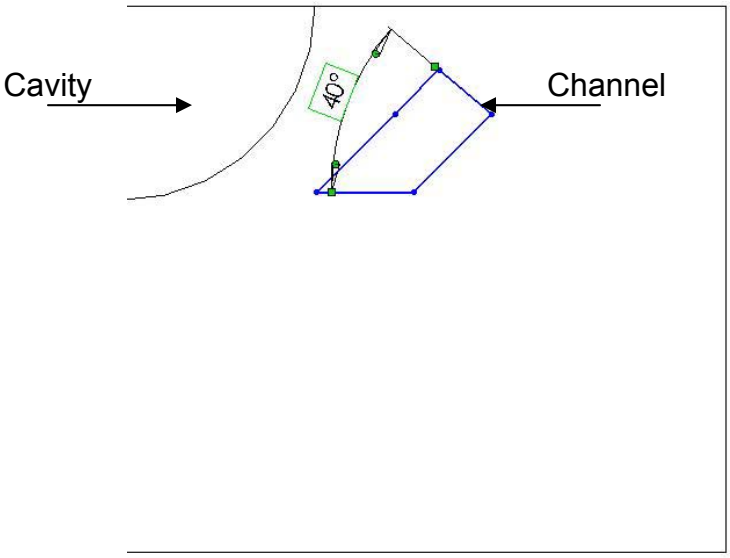

Figure 5.11. Front view of a mold with the proposed (sloped) channel geometry

5.2 POWDER REMOVAL RESULTS

The two parts described in section 4.2 were built with the EBM machine. The first part was designed to determine the minimum width of cooling channels that can be produced with the process. The channels were cleaned using a braided wire connected to a drill. Only channels with widths larger than 4mm could be cleaned. This is a lower limit on the cooling channel width that can be cleared of sintered powder. As a practical matter, it is suggested that wider channels (> 7mm) be used when possible. Figure 5.12 shows a picture of the part used in this experiment.

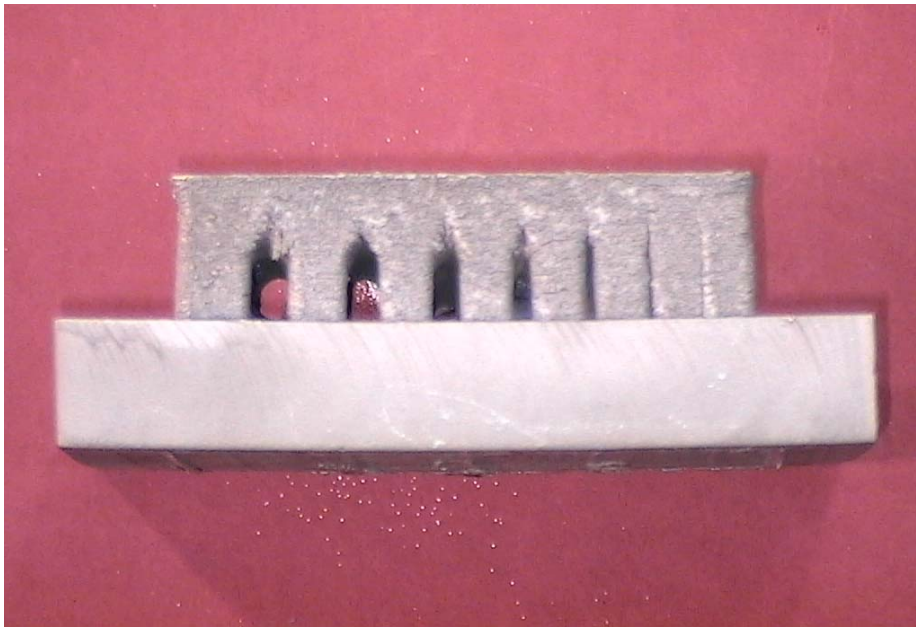

Figure 5.12. Part used to find minimum channel width

The second part was designed to help determine the minimum recommended curvature radius of the channel. A plate of transparent acrylic was clamped on top of the part to observe at what diameter it was not longer possible for the braided wire to go through. Figure 5.13 shows a picture of the part used in this experiment.

Figure 5.13. Part used to find minimum curvature radius

It was possible to clean the channel with spinning braided wire until the curvature reached a radius of 10mm. This is a minimum recommend radius. As a practical matter, it is recommended that slightly larger radii (>12 mm) be used whenever possible to facilitate powder removal.

6. CONCLUSIONS AND FURTHER RESEARCH

6.1 CONCLUSIONS

EBM is a promising technology that can be used to make injection molds with conformal cooling channels. However, this technology has some limitations that have never been studied before.

The presence of icicles in down-facing surfaces obstructs the powder removal from the cooling channels. Extensive research was performed to determine the set of process parameters that would lead to an icicle-free surface. It was concluded that partially melted supports do not significantly reduce the appearance of icicles for this material.

Based on these findings, a new channel geometry that avoids horizontal downward-facing surfaces was proposed. This geometry will not only provide a better surface but it will also provide a more efficient cooling due to a larger surface area. A minimum channel width of 5mm and curvature radius of 10mm are also recommended to obtain cooling channels that can be cleaned fairly easy.

6.2 FURTHER RESEARCH

- In this study, a real mold with conformal cooling channels was not manufactured. A mold could be made using EBM technology and following the guidelines provided on this study. This mold can be used in production to determine the economic benefit of conformal cooling channels and their effect on part accuracy.
- When the EBM machine runs in automatic mode the control system automatically adjusts the current and speed to maintain thermodynamic equilibrium. Therefore, the melting settings along the build are not constant. It is recommended to run the machine in manual mode to control the melting and the post heating parameters. Moreover, the down-facing surface of the part could be melted at lower or faster rates to determine if the melt speed affects the formation of icicles.

LIST OF REFERENCES

- Arcam, Sweden. (www.arcam.com)
- BAKISH, R. A. (1962) *Introduction to Electron Beam Technology.* New York, Wiley.
- BRYCE, D. M. (1996) *Plastic Injection Molding Manufacturing Process Fundamentals.* Dearborn, MI: Society of Manufacturing Engineers.
- CHEN, M.; AL-ALAMI, A.; & ZAK, G. (2003) Design and Fabrication of Injection Mould via Laminated Metal Tooling Process. *Society of Manufacturing Engineers.* Technical Paper No. MF03-158. Available from: www.sme.org
- COMSOL Inc, Burlington, MA (www.comsol.com)
- CORMIER, D; HARRYSSON, O.; WEST, H. (2004) Characterization of H13 steel produced via electron beam melting. *Rapid Prototyping Journal.* Vol. 10, No1, pp. 35–41. Available from: www.emeraldinsight.com/1355-2546.htm
- DALGARNO, K.W.; WRIGHT, C.S. (2001) Approaches to Processing Metals and Ceramics through the Laser Scanning of Powder Beds. *Society of Manufacturing Engineers.* Technical Paper No. PE03-143. Available from: www.sme.org
- DALGARNO, K.W.; STEWART, T.D. (2001) Production tooling for polymer moulding using the RapidSteel process. *Rapid Prototyping Journal.* Vol. 7, No 3, pp. 173-179. Available from: http://www.emerald-library.com/ft
- DICKENS, P.M. (1994) Rapid Prototyping – The Ultimate in Automation? *Assembly Automation.* Vol. 14, No. 2, pp. 10-13.

- FERREIRA, J.C.; MATEUS, A. (2003) Studies of Rapid Soft Tooling with Conformal Cooling Channels for Plastic Injection Moulding. *Journal of Materials Processing Technology.* Vol. 142, Issue 2, pp 508-516. Available from: www.siencedirect.com
- GIBBONS, G.J.; HANSELL, R.G.; NORWOOD, A.J. & DICKENS, P.M. (2003)
- Rapid Laminated Die-cast Tooling. *Assembly Automation.* Vol. 23, No. 4, pp. 372–381. Available from: http://www.emeraldinsight.com/0144-5154.htm
- HOPKINSON, N. & DICKENS, P. A Comparison between Stereolithography and Aluminium Injection Moulding Tooling. *Rapid Prototyping Journal.* Vol. 6 , No. 4 pp. 253-258. Available from: http://www.emerald-library.com
- JACOBS, P. F. (1998) New Frontiers in Mold Construction: High Conductivity Materials & Conformal Cooling Channels. *Society of Manufacturing Engineers.* Technical Paper No. CM994-115. Available from: www.sme.org
- JACOBSON, D.M.; BOCKING, C.E.; & REENIE, A.E.W. Injection Mould Manufacture in Less Than Five Days. *Society of Manufacturing Engineers.* Technical Paper No. PE02-268. Available from: www.sme.org
- KARAPATIS, N.P.; VAN GRIETHUYSEN, J.-P.S. & GLARDON, R. (1998) Direct Rapid Tooling: A Review of Current Research. *Rapid Prototyping Journ*al. Vol. 4, No. 2, pp. 77–89.
- MENGES, G.; MICHAELI, W.; MOHREN, P. (2001) *How to make injection molds?* Cincinnati: Hanser Gardner Publications.
- PYE, R.(1978) *Injection Mould Design: A Design Manual for the Thermoplastics Industry.* London: Godwin for the Plastics and Rubber Institute.

- RADSTOCK, E. (1999) Rapid Tooling. *Rapid Prototyping Journal.* Vol. 5, No. 4, pp. 164-168. Available from: http://www.emerald-library.com
- REES, H. (2002) *Mold Engineering.* Munich: Hanser.
- SCHILLER, S.; HEISIG, U.; PANZER, S. (1982) *Electron Beam Technology*. New York: John Wiley and Sons
- SMITH, R. (1994) Cubital Rapid Prototyping Shortens Time-to-Market. *Assembly Automation*. Vol. 14 No. 2, 1994, pp. 29-31.
- TANIGUCHI, N.; IKEDA, M.; MIYAMOTO, I.; MIYAZAKI, I. (1989) *Energy-Beam Processing of Materials: Advanced Manufacturing Using Various Energy Sources.* Oxford: Clarendon Press
- UPCRAFT, S. & FLETCHER R. (2003) The Rapid Prototyping Technologies. *Assembly Automation* Vol. 23, No. 4, pp. 318–330. Available from: http://www.emeraldinsight.com/0144-5154.htm
- ZHOU, J.G.; HE, Z. (1999) A New Rapid Tooling Technique and its Special Binder Study. *Rapid Prototyping Journal.* Vol. 5, No 2, pp. 82–88.